SEW EURODRIVE

Operating Instructions

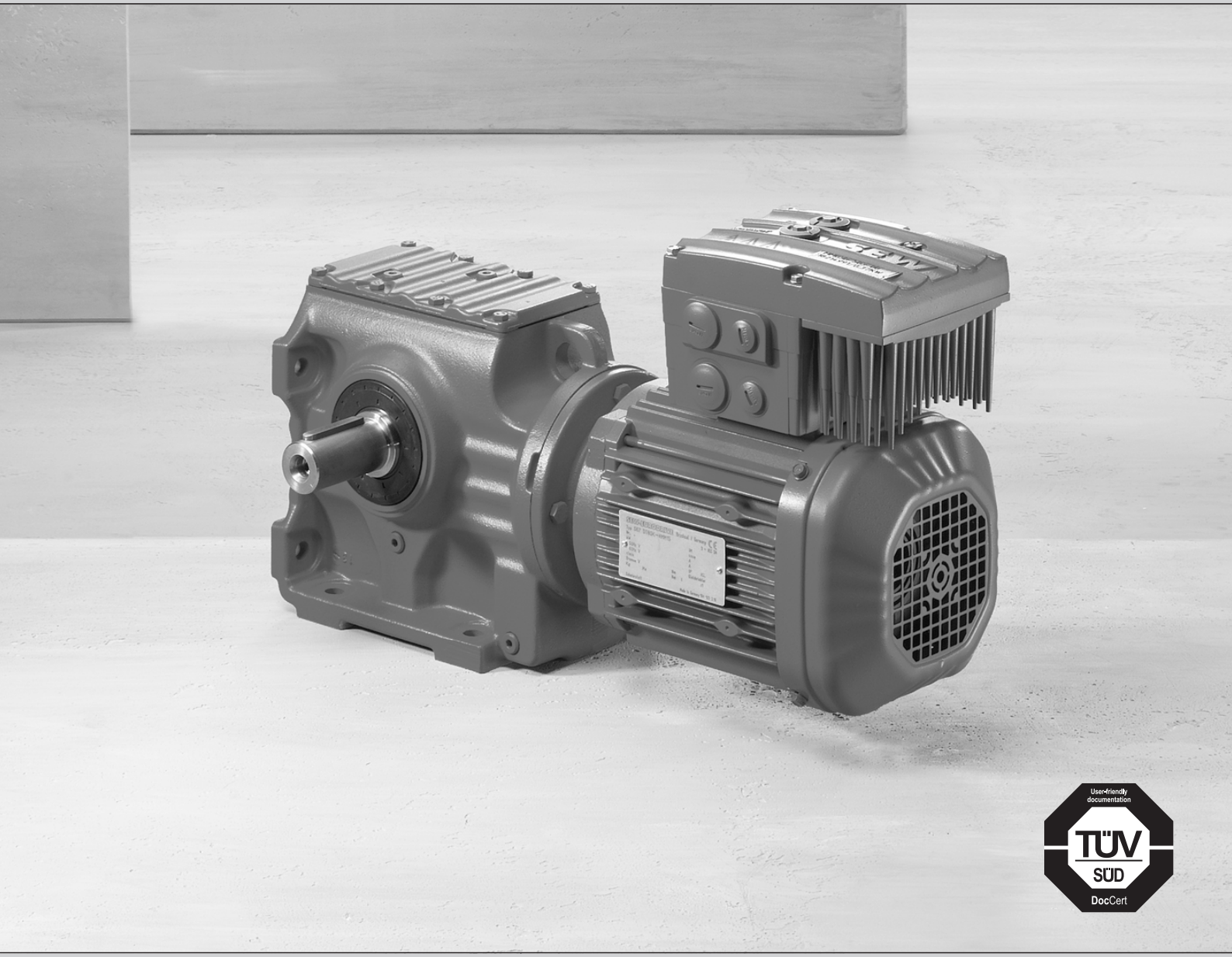

User-friendly documentation TÜV SÜD DocCert

Decentralized Drive Systems
MOVIMOT® MM..D with AS-Interface

Edition 04/2016

22167811/EN

Contents

22167811/EN – 04/2016

22167811/EN – 04/2016

22167811/EN – 04/2016

1 General information

1.1 About this documentation

This documentation is an integral part of the product. The documentation is intended for all employees who perform assembly, installation, startup, and service work on the product.

Make sure this documentation is accessible and legible. Ensure that persons responsible for the machinery and its operation as well as persons who work on the device independently have read through the documentation carefully and understood it. If you are unclear about any of the information in this documentation or require further information, contact SEW-EURODRIVE.

1.2 Structure of the safety notes

1.2.1 Meaning of signal words

The following table shows the grading and meaning of the signal words for safety notes.

Signal word	Meaning	Consequences if disregarded
⚠ **DANGER**	Imminent hazard	Severe or fatal injuries.
⚠ **WARNING**	Possible dangerous situation	Severe or fatal injuries.
⚠ **CAUTION**	Possible dangerous situation	Minor injuries
NOTICE	Possible damage to property	Damage to the drive system or its environment.
INFORMATION	Useful information or tip: Simplifies handling of the drive system.	

1.2.2 Structure of section-related safety notes

Section-related safety notes do not apply to a specific action but to several actions pertaining to one subject. The hazard symbols used either indicate a general hazard or a specific hazard.

This is the formal structure of a safety note for a specific section:

SIGNAL WORD

Type and source of hazard.

Possible consequence(s) if disregarded.

- Measure(s) to prevent the hazard.

22167811/EN – 04/2016

Meaning of the hazard symbols

The hazard symbols in the safety notes have the following meaning:

Hazard symbol	Meaning
	General hazard
	Warning of dangerous electrical voltage
	Warning of hot surfaces
	Warning of risk of crushing
	Warning of suspended load
	Warning of automatic restart

1.2.3 Structure of embedded safety notes

Embedded safety notes are directly integrated into the instructions just before the description of the dangerous action.

This is the formal structure of an embedded safety note:

⚠ **SIGNAL WORD** Type and source of hazard. Possible consequence(s) if disregarded. Measure(s) to prevent the hazard.

22167811/EN – 04/2016

1.3 Rights to claim under limited warranty

Read the information in this documentation. This is essential for fault-free operation and fulfillment of any rights to claim under limited warranty. Read the documentation before you start working with the unit!

1.4 Exclusion of liability

Read the information in this documentation, otherwise safe operation is impossible. You must comply with the information contained in this documentation to achieve the specified product characteristics and performance features. SEW-EURODRIVE assumes no liability for injury to persons or damage to equipment or property resulting from non-observance of these operating instructions. In such cases, SEW-EURODRIVE assumes no liability for defects.

1.5 Other applicable documentation

You must also observe the following publications.

- "MOVIMOT® gearmotors" catalog
- "DR.71 – 315 AC Motors" operating instructions
- Operating instructions for the gear unit (only for MOVIMOT® gearmotors)

You can download or order these publications on the Internet (**http://www.sew-eurodrive.com** under the heading "Documentation").

1.6 Product names and trademarks

The brands and product names in this documentation are trademarks or registered trademarks of their respective titleholders.

1.7 Copyright notice

22167811/EN – 04/2016

2 Safety notes

The following basic safety notes must be read carefully to prevent injury to persons and damage to property. The user must ensure that the basic safety notes are read and observed. Make sure that persons responsible for the plant and its operation, as well as persons who work independently on the unit, have read through the operating instructions carefully and understood them. If you are unclear about any of the information in this documentation, or if you require further information, please contact SEW-EURODRIVE.

2.1 Preliminary information

The following safety notes are primarily concerned with the use of MOVIMOT® drives. If you use other SEW-EURODRIVE components, also refer to the safety notes for these particular components in the corresponding documentation.

Also observe the additional safety notes provided in the individual chapters of this documentation.

2.2 General information

Never install or start up damaged products. In the event of damage, submit a complaint to the shipping company immediately.

During operation, MOVIMOT® drives can have movable or rotating parts or hot surfaces.

Removing covers without authorization, improper use as well as incorrect installation or operation may result in severe injuries to persons or damage to machinery. Documentation must be referred to for further information.

2.3 Target group

Only qualified personnel is authorized to perform installation, startup, troubleshooting or maintenance (observing EN 60364 and CENELEC HD 384 or DIN VDE 0100 and EN 60664-1, as well as national accident prevention guidelines).

Qualified electricians in the context of these basic safety notes are all persons familiar with installation, assembly, startup and operation of the product who possess the necessary qualifications.

All persons involved in any other work, such as transportation, storage, operation and waste disposal, must be trained appropriately.

22167811/EN – 04/2016

2.4 Designated use

MOVIMOT® inverters are components intended for installation in electrical systems or machines.

In case of installation in machines, startup of MOVIMOT® inverters (i.e. start of designated operation) is prohibited until it is determined that the machine meets the requirements stipulated in the Machinery Directive 2006/42/EC.

Startup (i.e. the start of designated use) is only permitted under observance of the EMC Directive (2014/30/EU).

MOVIMOT® inverters meet the requirements stipulated in the low voltage guideline 2014/35/EU. The standards contained in the declaration of conformity are used for the MOVIMOT® inverter.

Technical data and information on the connection requirements are provided on the nameplate and in the documentation; these must be observed under all circumstances.

2.4.1 Safety functions

MOVIMOT® inverters must not be used to perform any safety functions unless these are described and explicitly approved.

2.4.2 Hoist applications

MOVIMOT® inverters are suitable for lifting applications to a limited degree only, see operating instructions, chapter "Additional function 9".

Do not use MOVIMOT® inverters as safety devices in lifting applications.

2.5 Transportation, storage

Observe the notes on transportation, storage and proper handling. Comply with the requirements for climatic conditions stated in chapter "Technical data" of the operating instructions. Tighten attached lifting eyes securely. They are designed to handle the mass of the MOVIMOT® drive. Do not mount or apply any additional loads. Use suitable, sufficiently rated handling equipment (e.g. rope guides) if required.

22167811/EN – 04/2016

2.6 Installation

The units must be installed and cooled according to the regulations and specifications contained in the corresponding documentation.

Protect the MOVIMOT® inverters from excessive strain.

The following applications are prohibited unless explicitly permitted:

- Use in potentially explosive areas.
- Use in areas exposed to harmful oils, acids, gases, vapors, dust, radiation, etc.
- Use in non-stationary applications with strong mechanical oscillation and impact loads; see operating instructions, chapter "Technical data".

2.7 Electrical connection

Observe the applicable national accident prevention regulations when working on live MOVIMOT® inverters (e.g. BGV A3).

Perform electrical installation according to the relevant regulations (e.g. cable cross sections, fusing, PE connection). For any additional information, refer to the applicable documentation.

For notes on EMC compliant installation, such as shielding, grounding, arrangement of filters and routing of lines, refer to chapter "Installation instructions". The manufacturer of the system or machine is responsible for maintaining the limit values established by EMC legislation.

Preventive measures and protection devices must comply with the regulations in force (e.g. EN 60204-1 or EN 61800-5-1).

To ensure insulation, you must perform voltage checks on MOVIMOT® drives before startup, in accordance with EN 61800-5-1:2007, chapter 5.2.3.2.

2.8 Protective separation

MOVIMOT® inverters meet all requirements for protective separation of power and electronic connections in accordance with EN 61800-5-1. All connected circuits must also satisfy the requirements for protective separation to ensure reliable separation.

22167811/EN – 04/2016

2.9 Operation

Systems with integrated MOVIMOT® inverters must be equipped with additional monitoring and protection devices, if necessary, according to the applicable safety guidelines, such as the law governing technical equipment, accident prevention regulations, etc. Additional preventive measures may be required for applications with increased hazard potential.

Do not touch live components and power connections immediately after separation of the MOVIMOT® inverter from the supply voltage because there may still be some charged capacitors. Wait at least for 1 minute after having switched off the supply voltage.

As soon as supply voltages are present at the MOVIMOT® inverter, the connection box must be closed, i.e. the MOVIMOT® inverter and, if applicable, the connector of the hybrid cable must installed and connected with all 4 screws.

The MOVIMOT® inverter and power plug connectors (line connection and hybrid cable, if present) must not be removed during ongoing operation. Doing so can lead to dangerous electric arcs forming, which can cause irreparable damage to the unit (fire risk, irreparable contacts).

The MOVIMOT® drive only achieves the guaranteed IP degree of protection and resistance against vibrations and impacts when the MOVIMOT® inverter is securely screwed onto the connection box with 4 screws. Operation with inverter installed but not fully screwed on may significantly reduce the service life of the drive.

The fact that the operation LED and other display elements are no longer illuminated does not indicate that the unit has been disconnected from the supply system and no longer carries any voltage.

Mechanical blocking or internal safety functions of the unit can cause a motor standstill. Eliminating the cause of the problem or performing a reset may result in the drive re-starting automatically. If, for safety reasons, this is not permitted for the driven machine, disconnect the unit from the supply system before you start troubleshooting.

NOTICE!
Risk of burns: The surface temperature of the MOVIMOT® drive and the external options, e.g. the braking resistor heat sink, can exceed 60 °C during operation.

22167811/EN – 04/2016

3 Unit design

3.1 MOVIMOT® drive

The following figure shows the MOVIMOT® drive in different designs:

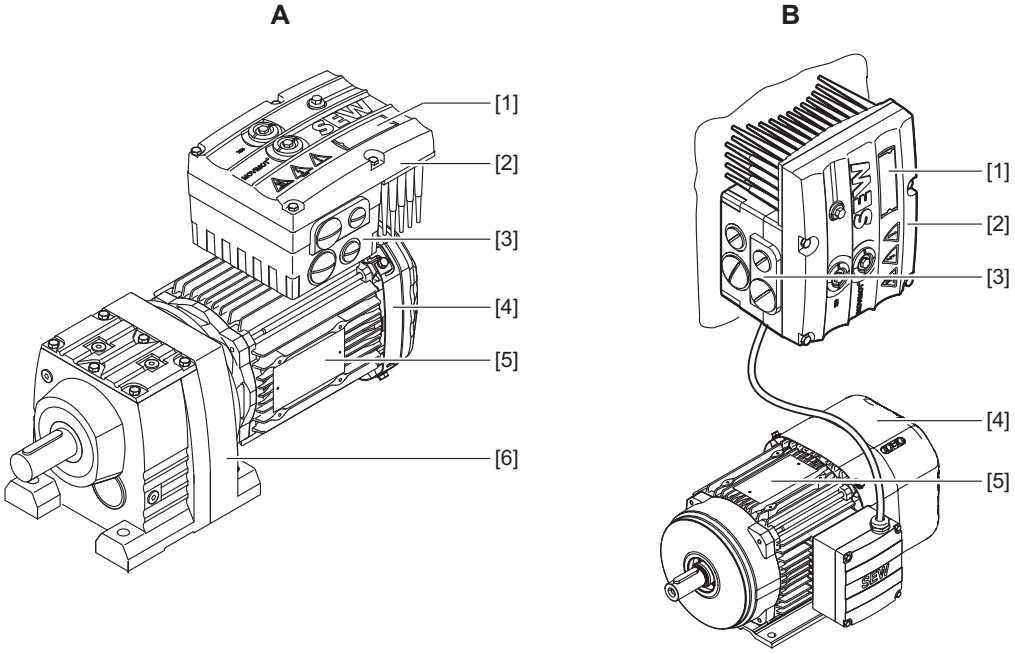

9007202786375819

[1] Unit identification MOVIMOT® inverter
[2] MOVIMOT® inverter
[3] Connection box
[4] Motor
[5] Drive nameplate
[6] Helical gear unit

A MOVIMOT® drive is a combination of:

- MOVIMOT® inverter
  - mounted on the motor (**A**)
  - or mounting close to the motor (**B**)
- Motor (see the motor operating instructions)
- Gear unit (optional, see gear unit operating instructions)

22167811/EN – 04/2016

3.2 MOVIMOT® inverter

The following figure shows the connection box and the bottom of the MOVIMOT® inverter:

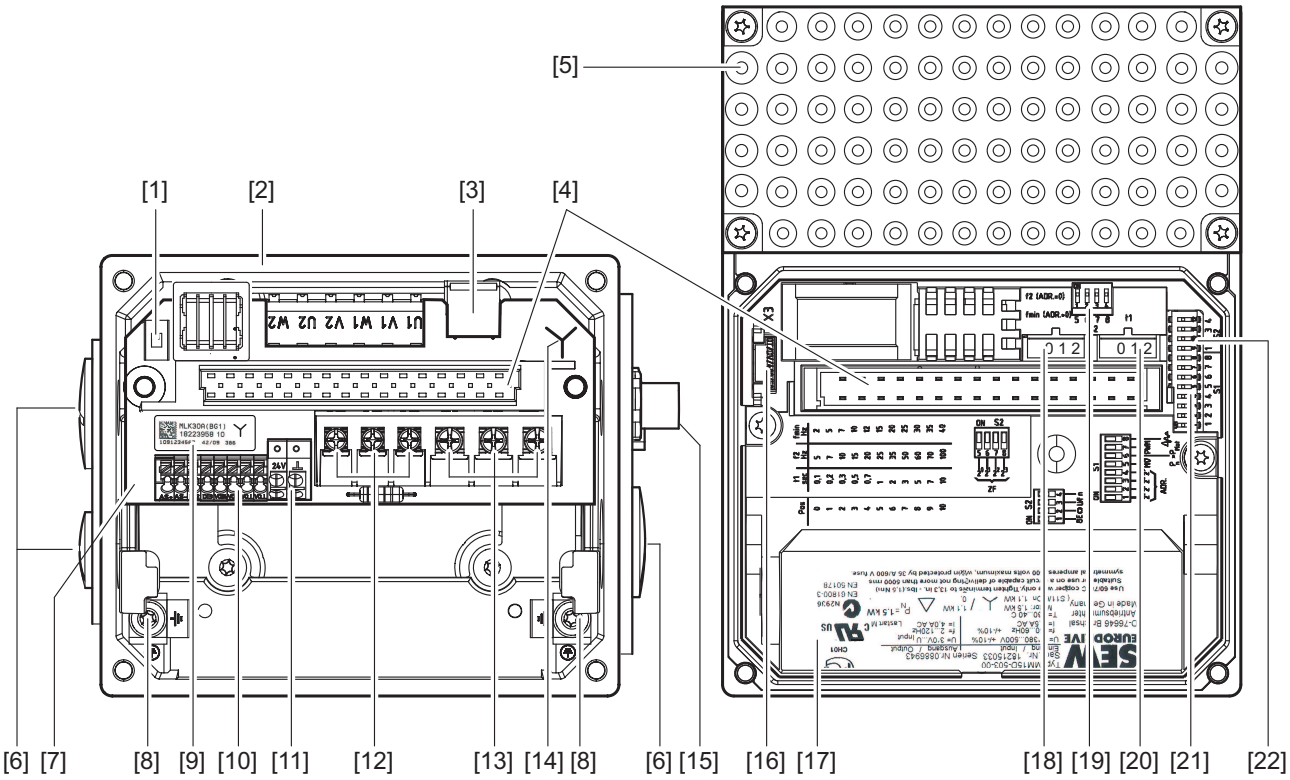

18014399652401675

[1] Switch S5 (to set the supply via AUX-PWR or AS-Interface data cable)
For the setting options, see chapter "Setting the 24 V supply via switch S5" (→ 🗎 141).
[2] Connection box
[3] X10: Plug connectors for BEM option
[4] Connection plug connection unit for the MOVIMOT® inverter
[5] MOVIMOT® inverter with heat sink
[6] Cable glands
[7] MLK3.A option with connection unit
[8] Screw for PE connection ⏚
[9] AS-Interface option nameplate
[10] X6: Electronics terminal strip
[11] X5: Electronics terminal strip
[12] X1: Connection for brake coil (motors with brake) or braking resistor (motors without brake)
[13] X1: Line connection L1, L2, L3
[14] Connection type identification
[15] AS-Interface connection
[16] Drive ID module
[17] Inverter nameplate
[18] Setpoint switch f2 (green)
[19] DIP switches S2/5 – S2/8
[20] Switch t1 for integrator ramp (white)
[21] DIP switches S1/1 – S1/8
[22] DIP switches S2/1 – S2/4

22167811/EN – 04/2016

The following figure shows the MOVIMOT® inverter with connection box:

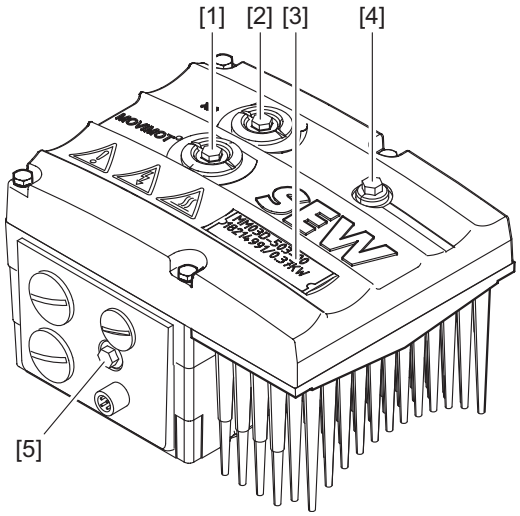

9007200397688587

[1] Setpoint potentiometer f1 with screw plug
[2] X50: Diagnostics interface with screw plug
[3] Device identification
[4] Inverter status LED
[5] AS-Interface LED

3.2.1 MOVIMOT® unit features

- Frequency inverter with vector-oriented motor control
- Power range: 0.37 – 4.0 kW (0.37 – 2.2 kW)
- Voltage range: 3 x 380 – 500 V (3 x 200 – 240 V)
- Application-specific parameterization is possible
- Pluggable parameter memory for data backup (drive ID module)
- Comprehensive protection and monitoring functions
- Low-noise thanks to PWM switching frequency 16 kHz
- Status LED for fast diagnostics
- Diagnostic interface with plug connector as a standard feature
- Diagnostics and manual operation using MOVITOOLS® MotionStudio
- 4-quadrant operation as standard
- Integrated brake management:
  - For motors with mechanical brake, the brake coil is used as braking resistor.
  - For motors without brake, MOVIMOT® is supplied with internal braking resistor as standard.
- Control takes place via the AS-Interface.
- MOVIMOT® can be supplied with UL approval (UL listed) on request.

22167811/EN – 04/2016

3.3 AS-interface option

The AS-Interface option is located on the connection board in the connection box, see following picture:

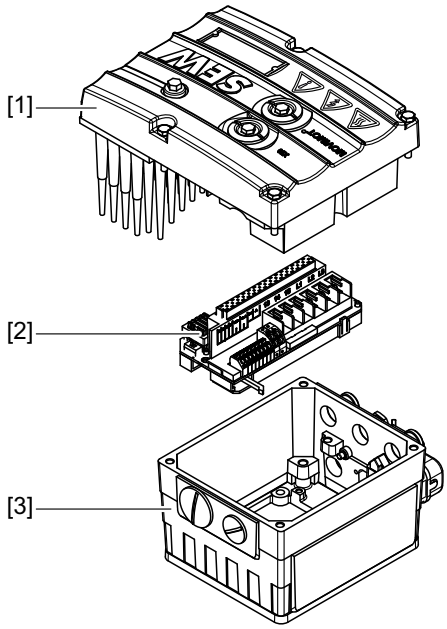

9007200457637003

[1] MOVIMOT® inverter
[2] Connection board with AS-Interface option
[3] Connection box

The MOVIMOT® drive is available with the following AS-Interface designs:

- MLK30A binary slave
- MLK31A double slave

  for the drive with several speed setpoints and ramps, parameterizable via AS-Interface
- Binary slave MLK32A in AB technology

  for the drive with several speed setpoints and ramps

Characteristics

The following shows the main differences between the AS-Interface options:

AS-Interface option	Stations at AS-Interface	Number of speed setpoints	Number of ramps	Can be parameterized via AS-Interface	24 V supply of the MOVIMOT®
MLK30A	max. 31	2 (16[1])	1 x t_{up} 1 x t_{down}	No	AS-Interface or AUX PWR
MLK31A	max. 31	6	3 x t_{up} 3 x t_{down}	Yes	AS-Interface or AUX PWR
MLK32A	max. 62	6	3 x t_{up} 3 x t_{down}	No	AUX PWR

1) Due to parameterization of scaling factors 16 fixed setpoints are available.

22167811/EN – 04/2016

The following figure shows the topology and the travel diagrams of the MOVIMOT® drive unit with the AS-Interface slaves:

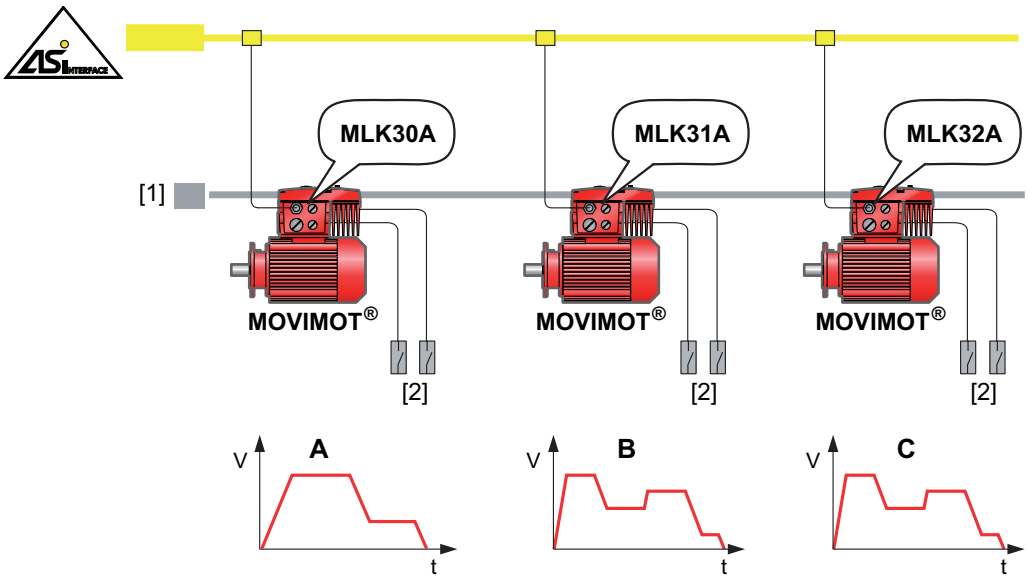

27021598963110155

[1] Supply system
[2] Sensors
A MOVIMOT® drive with **MLK30A**
B MOVIMOT® drive with **MLK31A**
(Several speed setpoints and ramps, parameterizable via AS-Interface, max. 31 AS-Interface stations)
C MOVIMOT® drive with **MLK32A**
(Several speed setpoints and ramps, max. 62 AS-Interface stations)

22167811/EN – 04/2016

3.3.1 MLK30A binary slave

Connected to the AS-Interface, the MLK30A slave works like a module with 4 inputs and 4 outputs.

The cyclic output bits control the MOVIMOT® inverter.

The input bits transmit the status of the drive and 2 additional sensor signals to the AS-Interface master.

The acyclic parameter bits are used to select speed scaling factors.

The MLK30A option is compatible with MOVIMOT® MM..C-...-30 with integrated AS-Interface.

3.3.2 MLK31A double slave

The MLK31A option works as a double slave on the AS-Interface according to AS-Interface specification 3.0.

The serial AS-Interface data transmission allows for MOVIMOT® parameters and display values to be written and read.

The MOVIMOT® inverter is controlled via the cyclic output bits. The coding of the data bits is specified in different function modules. The MOVIMOT® inverter interprets these bits as different control and status codes. You can switch between the function modules using the acyclic parameter bits.

The input bits transmit the status of the drive and 2 additional sensor signals to the AS-Interface master.

3.3.3 MLK32A binary slave

The MLK32A option works as a slave on the AS-Interface according to AS-Interface specification 3.0.

The MOVIMOT® inverter is controlled via the cyclic output bits. The coding of the data bits is specified in different function modules. The MOVIMOT® inverter interprets these bits as different control and status codes. You can switch between the function modules using the acyclic parameter bits.

The input bits transmit the status of the drive and 2 additional sensor signals to the AS-Interface master.

22167811/EN – 04/2016

3.4 MOVIMOT® drive type designation

3.4.1 Nameplate

The following figure gives an example of a MOVIMOT® drive nameplate. The nameplate is attached to the motor.

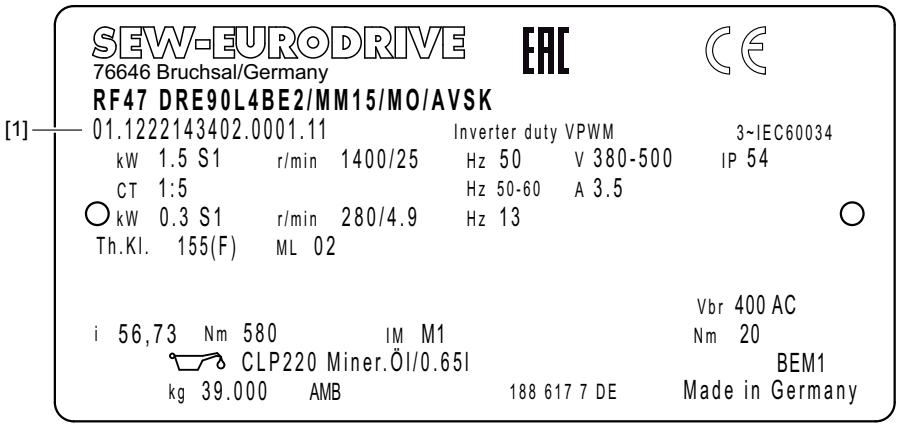

18014400195306635

[1] Serial number

3.4.2 Type designation

The following table shows an example of the type designation of the MOVIMOT® drive **RF47 DRE90L4BE2 /MM15/MO/AVSK**:

RF	**Gear unit series**	
47	**Gear unit size**	
DRE	**Motor series** (DRS.., DRE.., DRP.., DRN.., DRU..)	
90L	**Motor size**	
J	**Rotor**	C = copper rotor J = LSPM rotor
4	**Number of motor poles**	
BE2	**Additional feature motor (brake)**	
/		
MM15	**MOVIMOT® inverter**	
/		
MO	**Additional feature: inverter** [1] (e.g. MLK30A)	
/		
AVSK	**Plug connector for AS-Interface**	

1) The nameplate only displays options installed at the factory.

22167811/EN – 04/2016

3.5 MOVIMOT® inverter type designation

3.5.1 Nameplate

The following figure gives an example of a MOVIMOT® inverter nameplate:

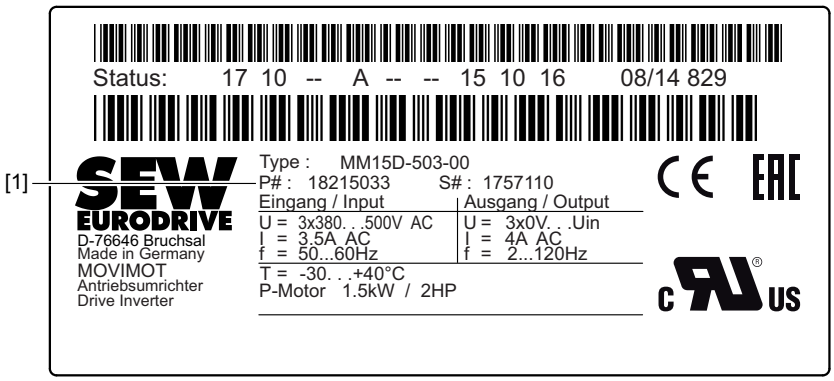

27021599722150283

[1] Part number

3.5.2 Type designation

The following table shows an example of the type designation of the MOVIMOT® inverter **MM15D-503-00**:

MM	**Unit series**	MM = MOVIMOT®
15	**Motor power**	15 = 1.5 kW
D	**Version D**	
-		
50	**Connection voltage**	50 = AC 380 – 500 V 23 = AC 200 – 240 V
3	**Connection type**	3 = 3-phase
-		
00	**Design**	00 = Standard

The available designs can be found in the "MOVIMOT® gearmotors" catalog.

22167811/EN – 04/2016

3.5.3 Unit identification

The unit identification [1] on the top of the MOVIMOT® inverter provides information about the inverter type [2], inverter part number [3], unit power [4].

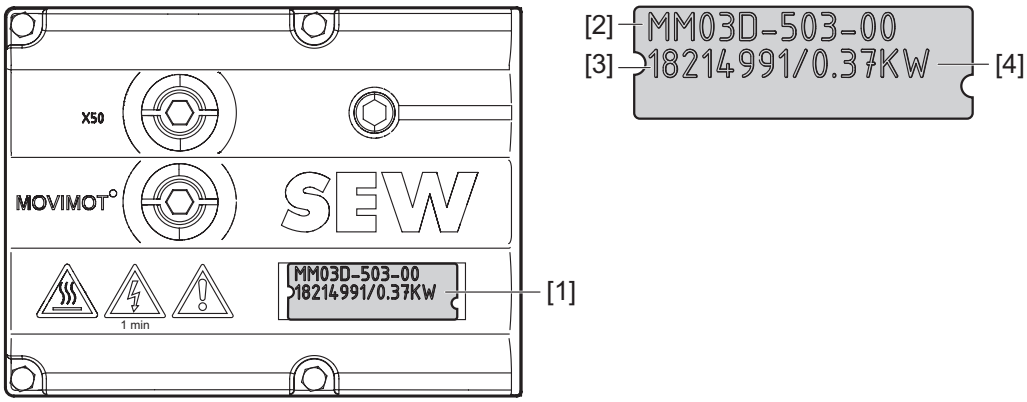

9007199712657547

3.5.4 AS-Interface option nameplate

The following figure shows an example of the nameplate of the AS-Interface option MLK30A:

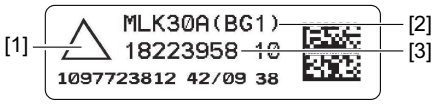

9007201609242891

[1] Connection type identification
[2] AS-Interface option – type designation
[3] Part number

22167811/EN – 04/2016

3.6 Type designation of the design "mounted close to the motor"

3.6.1 Nameplate

The following figure shows an example of the MOVIMOT® inverter mounted close to the motor with corresponding nameplate and type designation:

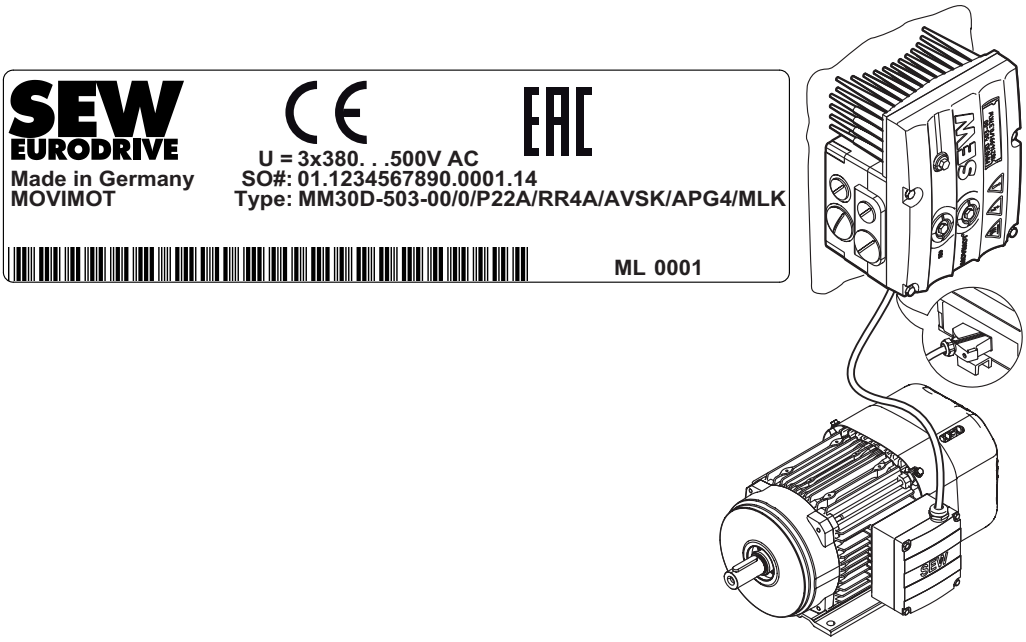

18014399652637451

3.6.2 Type designation

The following table shows the type designation for the MOVIMOT® inverter **MM30D-503-00/0/P22A/RR4A/AVSK/APG4/MLK** with mounting close to the motor:

MM30D-503-00	MOVIMOT® inverter
/	
0	**Connection type** 0 = ⅄ 1 = △
/	
P22A	**Adapter for mounting close to the motor**
/	
RR4A	**Connection box design**
/	
AVSK	**Plug connector option**
/	
APG4	**Plug connector** for connection to motor
/	
MLK	**Additional feature: inverter**[1)]

1) The nameplate only displays options installed at the factory.

22167811/EN – 04/2016

4 Mechanical installation

4.1 Installation notes

INFORMATION

Observe the general safety notes.

⚠ WARNING

Improper installation/disassembly of MOVIMOT® drives and mount-on components.

Risk of injury.

- Adhere to the notes about installation and disassembly.
- Before releasing shaft connections, make sure that there are no active torsional moments present (tensions within the system).

⚠ WARNING

Risk of injury if the drive starts up unintentionally and danger of electrical voltage.

Dangerous voltages may still be present for up to 1 minute after disconnection from the power supply.

- Disconnect the MOVIMOT® drive from the power supply before you start working on the unit and secure it against unintentional reconnection to the voltage supply.
- Secure the output shaft against rotation.
- Wait for at least 1 minute before removing the MOVIMOT® inverter.

- Comply with all instructions referring to the technical data and the permissible conditions where the unit is operated.
- Only use the provided attachment options when mounting the MOVIMOT® drive.
- Use only mounting and locking elements that fit into the existing bores, threads and countersinks.

4.2 Tools required

- Set of wrenches
- Socket wrench, SW8 mm
- Torque wrench
- Screwdriver set
- Compensation elements (washers and spacing rings), if necessary

4.3 Installation requirements

Check that the following requirements are met before you start installing the unit:

- The data on the nameplate of the drive matches the voltage supply system.
- The drive is undamaged (no damage caused by transportation or storage)

22167811/EN – 04/2016

- The ambient temperature corresponds to the specifications in chapter "Technical data" of the operating instructions. Note that the temperature range of the gear unit may also be restricted, see gear unit operating instructions.
- The MOVIMOT® drive must **not** be installed under the following harmful ambient conditions:
  - In potentially explosive atmospheres
  - Oils
  - Acids
  - Gases
  - Vapors
  - Radiation
  - etc.
- When the drive is installed in abrasive ambient conditions, protect the output end oil seals against wear.

4.4 Installation of MOVIMOT® gearmotor

4.4.1 Installation tolerances

The following table shows the permitted tolerances of the shaft ends and flanges of the MOVIMOT® drive.

Shaft end	Flange
Diameter tolerance according to EN 50347 • ISO j6 with Ø ≤ 26 mm • ISO k6 with Ø ≥ 38 mm up to ≤ 48 mm • ISO m6 at Ø > 55 mm • Centering bore in accordance with DIN 332, shape DR..	Centering shoulder tolerance in accordance with EN 50347 • ISO j6 with Ø ≤ 250 mm • ISO h6 with Ø > 300 mm

22167811/EN – 04/2016

4.4.2 Installing MOVIMOT®

NOTICE

Loss of guaranteed degree of protection if the MOVIMOT® inverter is installed incorrectly or not at all.

Damage to the MOVIMOT® inverter.

- When removing the MOVIMOT® inverter from the connection box, it must be protected from dust and moisture.

Observe the following notes and regulations for mounting the MOVIMOT® drive:

- Only install the MOVIMOT® drive on a level, low-vibration, and torsionally rigid support structure.
- Observe the permitted mounting position on the drive nameplate.
- Thoroughly remove any anti-corrosion agent from the shaft end. Use a commercially available solvent. Do not allow the solvent to penetrate the bearings and sealing rings (damage to the material).
- Align the motor carefully to avoid placing any unacceptable strain on the motor shafts. Observe the permitted overhung and axial loads specified in the "MOVIMOT® gearmotors".
- Do not jolt or hammer the shaft end.
- Use an appropriate cover to prevent objects or fluids from entering motors in vertical mounting positions.
- Ensure sufficient clearance around the unit to allow for adequate cooling air supply. Ensure that exhaust air warmed by other devices cannot be drawn in.
- Balance components that were subsequently mounted to the shaft with a half key (output shafts are balanced with a half key).
- The condensation drain holes are sealed with plastic plugs. Unplug them only if necessary.

  Open condensation drain holes are not permitted. If condensation drain holes are open, higher degrees of protection no longer apply.

4.4.3 Installation in damp locations or in the open

Observe the following notes for mounting the MOVIMOT® drive in damp areas or in the open:

- Use suitable cable glands for the incoming cables. Use reducing adapters if necessary.
- Coat the threads of the cable glands and screw plugs with sealing compound and tighten them properly. Then coat the cable glands again.
- Seal the cable entry properly.
- Thoroughly clean the sealing surfaces of the MOVIMOT® inverter before re-assembly.
- If the corrosion protection coating is damaged, restore the coating.
- Check whether the degree of protection specified on the nameplate is permitted in the ambient conditions on site.

22167811/EN – 04/2016

4.5 Installation of MOVIMOT® options

4.5.1 Installing option MLU13A

Option MLU13A is installed in the modular connection box at the factory. If you have any questions about retrofitting the option, contact the SEW-EURODRIVE service.

INFORMATION

Installation is only permitted in combination with the modular connection box of MOVIMOT® MM03D-503-00 – MM40D-503-00 and with the AS-Interface option MLK30A or MLK31A.

The following figure depicts an installation example. The installation depends on the used connection box and on other installed options, if there are any.

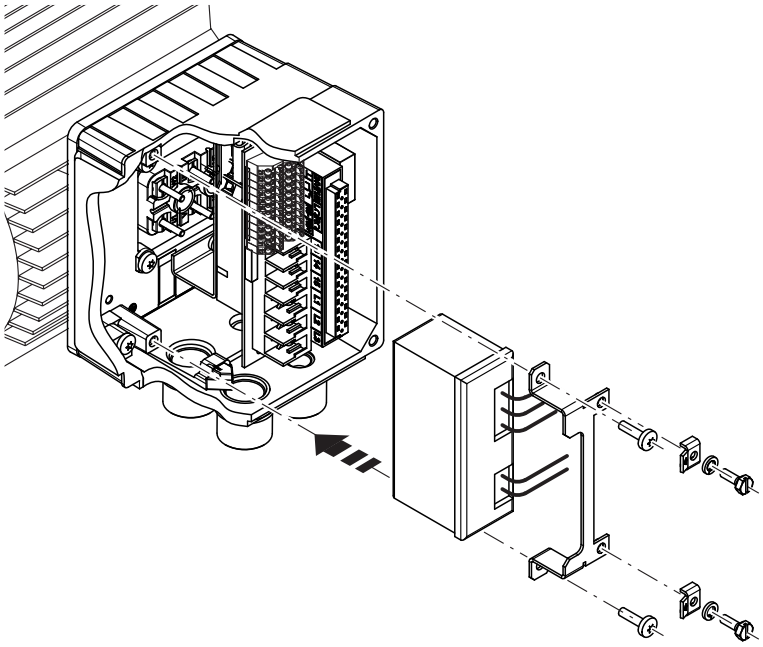

1113300875

For information on connecting the MLU13A option, refer to chapter "Connecting the MLU13A option" (→ 🗎 58).

22167811/EN – 04/2016

4.5.2 Installation of option MNF21A

Option MNF21A is installed in the modular connection box at the factory. If you have any questions about retrofitting the option, contact the SEW-EURODRIVE service.

INFORMATION

Installation is only permitted in combination with the modular connection box of MOVIMOT® MM03D-503-00 – MM40D-503-00.

The following figure depicts an installation example. The installation depends on the used connection box and on other installed options, if there are any.

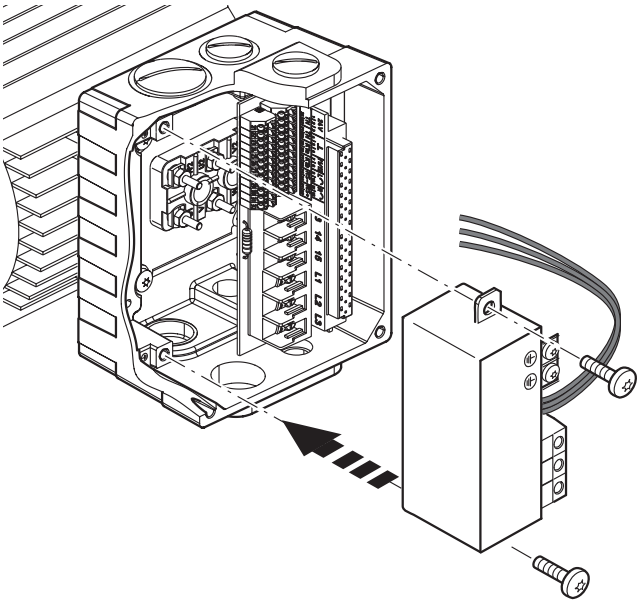

9007202007925643

For information on connecting the MNF21A option, refer to chapter "Connection of MNF21A option" (→ 🗎 59).

22167811/EN – 04/2016

4.5.3 Installation of URM/BEM options

The URM and BEM options are installed in the connection box at the factory. If you have any questions about retrofitting the options URM, BEM, or BES, please contact the SEW-EURODRIVE service.

The following figure depicts an installation example. The installation depends on the used connection box and on other installed options, if there are any.

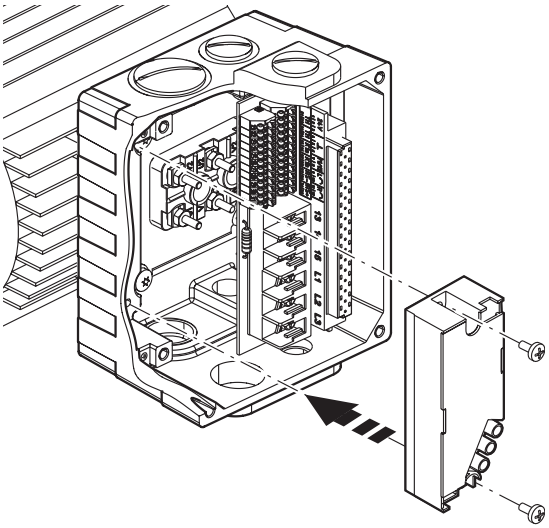

458307467

For information on connecting the URM option, refer to chapter "Connecting the URM option" (→ 🗎 60).

For information on connecting the BEM option, refer to chapter "Connecting the BEM option" (→ 🗎 61).

22167811/EN – 04/2016

4.6 Mounting MOVIMOT® inverter close to the motor

The following figure shows the mounting dimensions for mounting the MOVIMOT® inverter close to the motor:

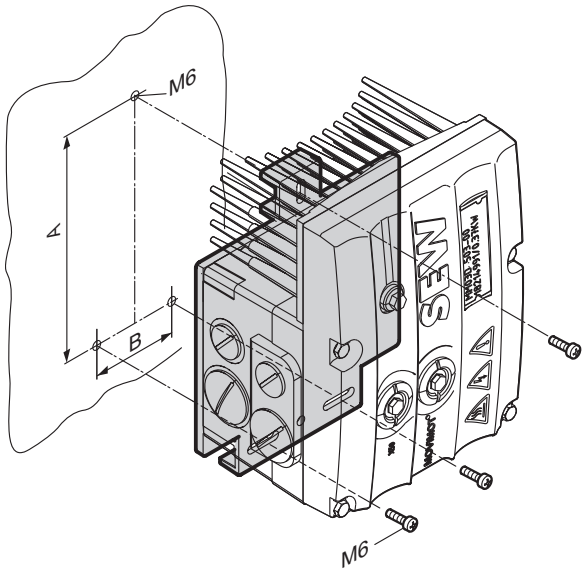

9007199713018763

Size	Type	A	B
1	MM03D503-00 – MM15D-503-00 MM03D233-00 – MM07D-233-00	140 mm	65 mm
2/2L	MM22D503-00 – MM40D-503-00 MM11D233-00 – MM22D-233-00	170 mm	65 mm

22167811/EN – 04/2016

4.7 Tightening torques

4.7.1 MOVIMOT® inverter

Tighten the screws for fastening the MOVIMOT® inverter using 3.0 Nm in diametrically opposite sequence.

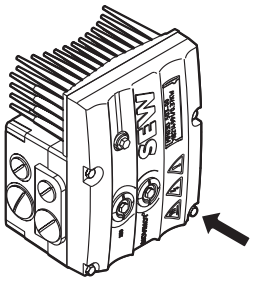

9007199713318923

4.7.2 Screw plugs

Tighten the screw plugs of potentiometer f1 and connection X50 using 2.5 Nm.

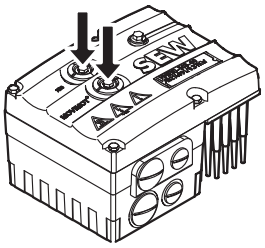

9007199713311371

4.7.3 Cable glands

Observe the manufacturer's specifications and the following information for cable glands.

- Pay attention to the O-ring on the thread [1].
- The thread must be 5 – 8 mm long [2].

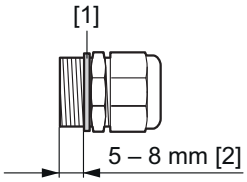

4.7.4 Screw plugs for cable entries

Tighten screw plugs with 2.5 Nm.

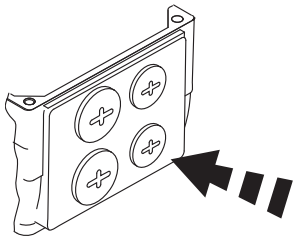

322777611

22167811/EN – 04/2016

4.7.5 Modular connection box

For fastening the connection box on the mounting plate, tighten the screws using 3.3 Nm.

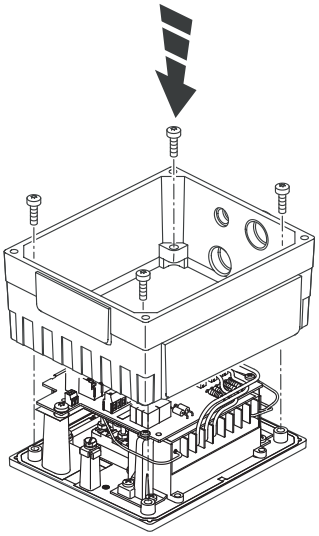

322786187

4.7.6 Tightening torques for terminals

Use the following tightening torques for terminals during installation:

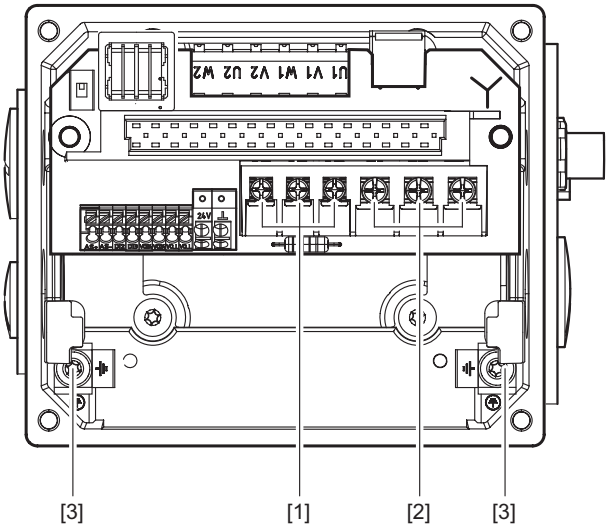

1143643275

[1] 0.8 – 1.5 Nm
[2] 1.2 – 1.6 Nm
[3] 2.0 – 2.4 Nm

22167811/EN – 04/2016

5 Electrical installation

5.1 Installation notes

Observe the following information on electrical installation:

- Observe the general safety notes.
- Comply with all instructions referring to the technical data and the permissible conditions where the unit is operated.
- Use suitable screw fittings for the cables (use reducing adapters if necessary). With connector plug variants, you must use a suitable mating connector.
- Seal open cable entries with screw plugs.
- Use protective caps to seal plug connectors not in use.

5.2 Installation instructions

5.2.1 Connecting power supply cables

- The nominal voltage and frequency of the MOVIMOT® inverter must correspond to the data for the power supply system.
- Install safety features F11/F12/F13 for line fuses at the beginning of the power supply cable behind the supply bus junction, see chapter "Connection of MOVIMOT® MM..AVSK".

  The following safety features are permitted for F11/F12/F13:

  – Fuses in utilization category gG
  – Miniature circuit breakers with characteristic B or C
  – Motor overload circuit breaker

  Size the safety features according to the cable cross section.
- SEW-EURODRIVE recommends using insulation monitors with pulse-code measurement in voltage supply systems with a non-earthed star point (IT systems). Use of such devices prevents the insulation monitor false tripping due to the earth capacitance of the inverter.
- Size the cable cross section according to the input current I_{mains} for rated power (see operating instructions, "Technical data" chapter).

22167811/EN – 04/2016

5.2.2 Permitted cable cross section of the MOVIMOT® terminals

Power terminals

Observe the permitted cable cross sections for installation:

Power terminals	
Cable cross section	1.0 mm^2 – 4.0 mm^2 (2 x 4.0 mm^2) AWG17 – AWG12 (2 x AWG12)
Conductor end sleeves	• **For single assignment:** Connect only single-wire conductors or flexible conductors with conductor end sleeves (DIN 46228, material E-CU) **with or without plastic collars**. • **For double assignment:** Connect only flexible conductors with conductor end sleeve (DIN 46228-1, material E-CU) **without plastic collar**. • Permitted length of the conductor end sleeve: at least 8 mm

24 V AUX-PWR terminals

Adhere to the permitted cable cross sections for installation:

24 V AUX PWR terminal ("24V"/"⊥") for MLK30A , MLK31A	
Cable cross section	0.2 mm^2 – 2.5 mm^2

INFORMATION

MOVIMOT® with MLK32A is connected to the 24 V AUX-PWR using a M12 plug connector. For MOVIMOT® with MLK32A, the terminals "24V" and "⊥" may only be used for internal wiring.

Control terminals

Observe the permitted cable cross sections for installation:

Control terminals	
Cable cross section • Single-wire conductor (bare wire) • Flexible conductor (bare litz wire) • Conductor end sleeve **without** plastic collar	0.5 mm^2 – 1.0 mm^2 AWG20 – AWG17
• Conductor end sleeve **with** plastic collar	0.5 mm^2 – 0.75 mm^2 AWG20 – AWG19

22167811/EN – 04/2016

Control terminals	
Conductor end sleeves	• Connect only single-wire conductors or flexible wire conductors **with or without** conductor end sleeve (DIN 46228, material E-CU). • Permitted length of the conductor end sleeve: at least 8 mm

22167811/EN – 04/2016

5.2.3 Activating the 24-V-AUX-PWR terminals X5:1 – X5:2

(AUX PWR at MLK30A or MLK31A)

Connect the conductor.	Remove the conductor.
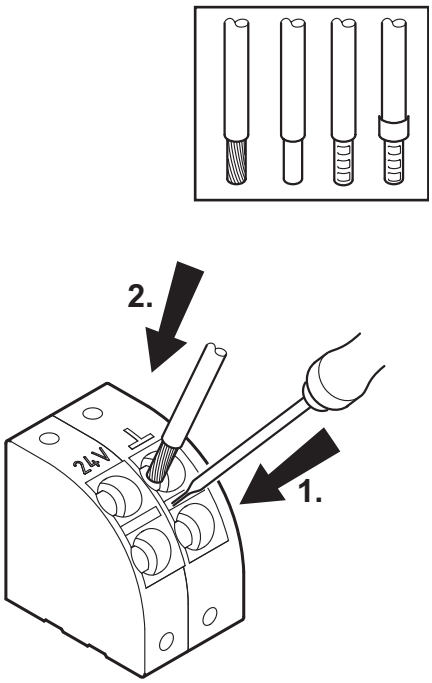	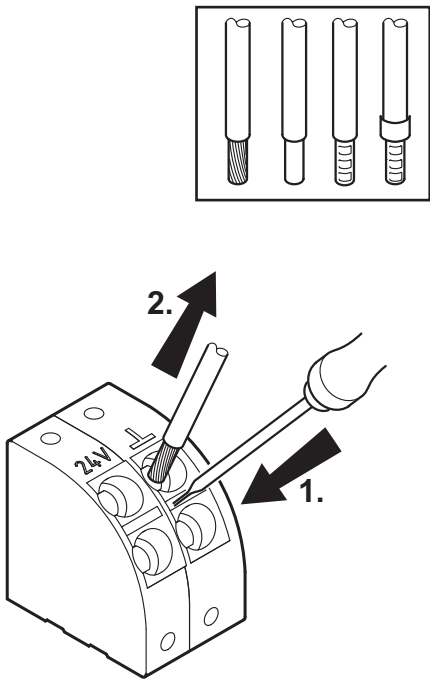
Before inserting or removing a conductor, you have to insert a screwdriver (max. blade width 3.5 mm) into the central opening to open the clamping spring.	

22167811/EN – 04/2016

5.2.4 Activating control terminals X6:1 – X6:8

(MOVIMOT® control terminals)

Note the following information for actuating the control terminal clamps:

Connect conductor, without pushing the activation button.	**Connect conductor, after pressing the activation button.**
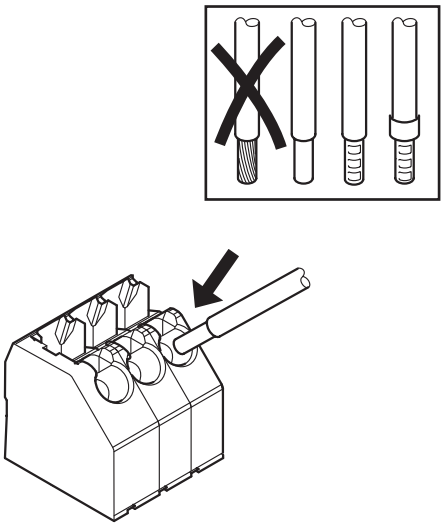 9007199919965835	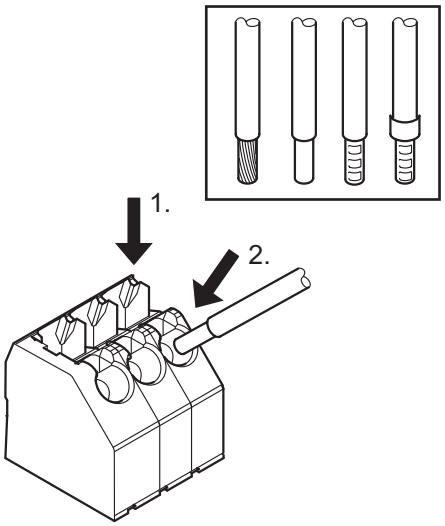 9007200623153931
The following conductors can be installed directly (without tool) up to 2 cross-section sizes below the nominal cross section: • Single-wire conductors • Flexible conductors with end sleeves	When connecting the following conductors, you must press the actuation button on top to open the clamping spring: • Untreated, flexible conductors • Conductors with small cross sections that cannot be plugged in directly

Remove the conductor. **First press the activation button.**
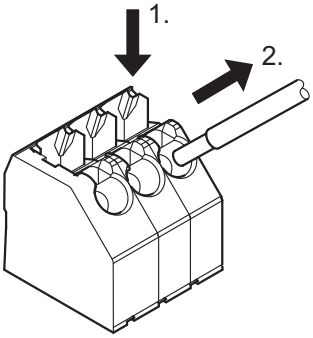

Before removing the conductor, first press the actuation button on top.

22167811/EN – 04/2016

5.2.5 Residual current device

⚠ WARNING

No protection against electric shock if an incorrect type of residual current device is used.

Severe or fatal injuries.

- Use only universal current sensitive residual current devices of type B for frequency inverters.

- Frequency inverters generate a DC current component in the leakage current and can significantly reduce the sensitivity of an residual current device of type A. A type A residual current device is thus not permitted as protection device.
- If the use of a residual current device is not mandatory according to the standards, SEW-EURODRIVE recommends not to use a residual current device.

5.2.6 Line contactor

NOTICE

Damage to the MOVIMOT® inverter due when using the line contractor K11 for jog mode.

Damage to the MOVIMOT® inverter.

- Do not use the K11 line contactor (see wiring diagram) for jog mode, but only for switching the inverter on and off. For jog mode, use the commands "CW / Stop" or "CCW / Stop".
- Observe a minimum switch-off time of 2 s for the input contactor K11.

- Only use a contactor of utilization category AC3 (EN 60947-4-1) as a line contactor.

22167811/EN – 04/2016

5.2.7 Information on PE connection

⚠ WARNING

Electric shock due to incorrect connection of PE.

Severe or fatal injuries.

- The permitted tightening torque for the screw is 2.0 – 2.4 Nm (18 – 21 lb.in).
- Observe the following notes regarding PE connection.

Prohibited assembly procedure	Recommendation: Assembly with forked cable lug Permitted for all cross sections	Assembly with solid connecting wire Permitted for cross sections of up to max. 2.5 mm²
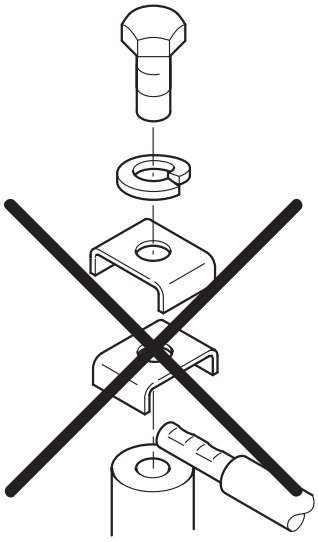	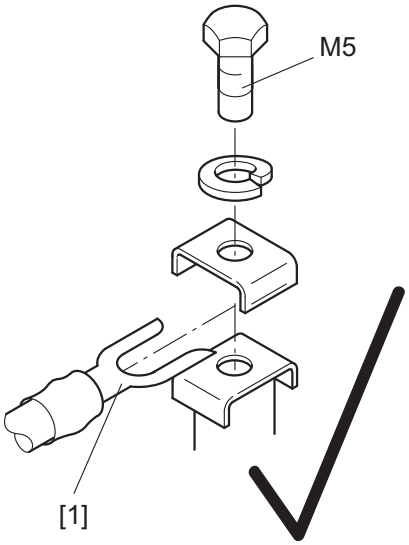 9007199577775243	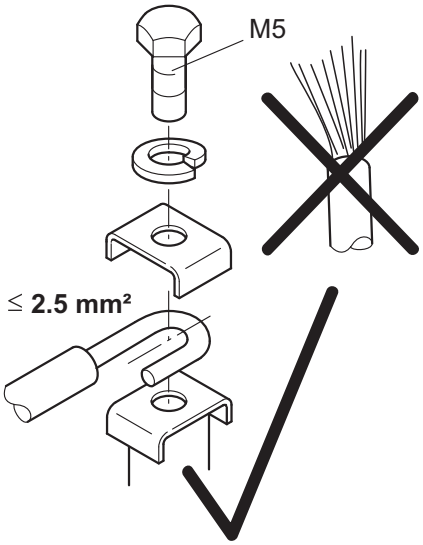 9007199577779339

[1] Forked cable lug suitable for M5 PE screws

Leakage currents ≥ 3.5 mA can occur during normal operation. To meet the requirements of EN 61800-5-1, observe the following notes:

- The protective earth (PE) connection must meet the requirements for plants with high earth-leakage currents.
- This usually means
  - installing a PE connection cable with a minimum cross section of 10 mm²
  - or installing a second PE connection cable in parallel with the original PE connection.

22167811/EN – 04/2016

5.2.8 EMC-compliant installation

INFORMATION

This drive system is not designed for operation on a public low voltage grid that supplies residential areas.

This is a product with restricted availability (categories C1 to C4 according to EN 61800-3). This product may cause EMC interference. In this case, it is recommended that the user take suitable measures.

With respect to the EMC regulation, frequency inverters cannot be operated as standalone units. Regarding EMC, they can only be evaluated when they are integrated in a drive system. Conformity is declared for a described, CE-typical drive system. These operating instructions contain further information.

5.2.9 Recommendation for improving the grounding (EMC), HF grounding

For improved, low-impedance grounding at high frequencies, we recommend using the following connections. SEW-EURODRIVE recommends to use corrosion-resistant connection elements.

HF grounding is not installed as standard.

The option HF grounding can be combined with the PE connection in the connection box (NF grounding).

The option HF grounding is available as follows:

- Completely pre-assembled at the factory
- or as "grounding terminal" kit for customer installation; part numbers listed in the following table.

Motor size	Part number of "Grounding terminal" kit
DR..71S/M DR..80S/M, DRN80	13633953
DR..90M/L, DRN90	
DR..100M, DRN100LS	
DR..100L – 132, DRN100L – 132S	13633945

INFORMATION

All parts of the kit are made from stainless steel.

INFORMATION

For further information regarding the grounding, refer to the SEW publication "Drive Engineering – Practical Implementation, EMC in Drive Engineering".

INFORMATION

If you use 2 or more ground straps, they must be attached with a longer screw. The specified tightening torques refer to a strap thickness of t ≤ 3 mm.

22167811/EN – 04/2016

Sizes DR..71S/M, DR..80S/M and DRN80 with HF(+LF) grounding

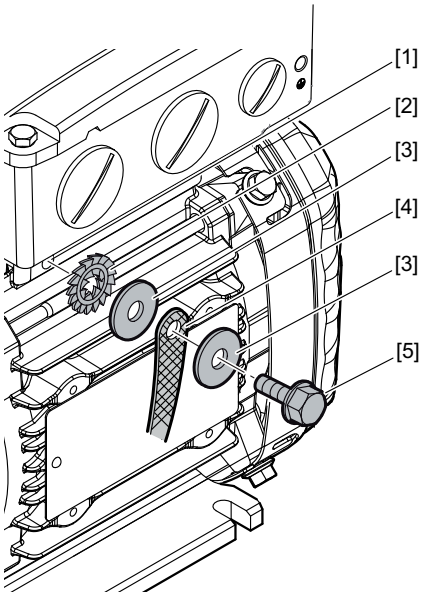

8026768011

[1] Use of the pre-cast bore at the stator housing
[2] Serrated lock washer
[3] Disk ISO 7093
[4] Ground strap (not included in the delivery)
[5] Self-tapping screw DIN 7500 M6 × 16, tightening torque 10 Nm

Sizes DR..90M/L, DRN90 with HF(+LF) grounding

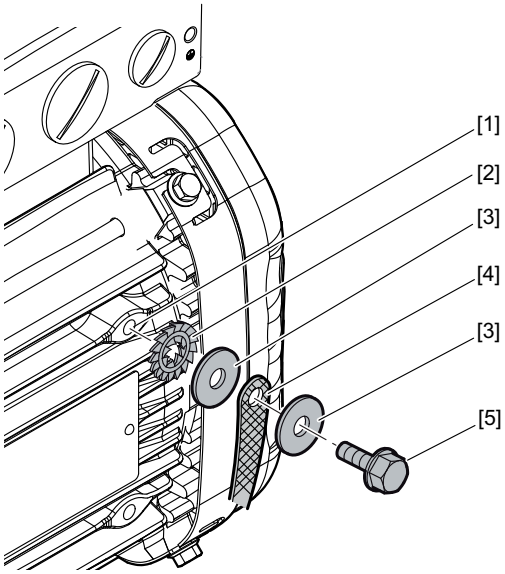

8026773131

[1] Use of the pre-cast bore at the stator housing
[2] Serrated lock washer
[3] Disk ISO 7093
[4] Ground strap (not included in the delivery)
[5] Self-tapping screw DIN 7500 M6 × 16, tightening torque 10 Nm

22167811/EN – 04/2016

Size DR..100M, DRN100LS with HF(+LF) grounding

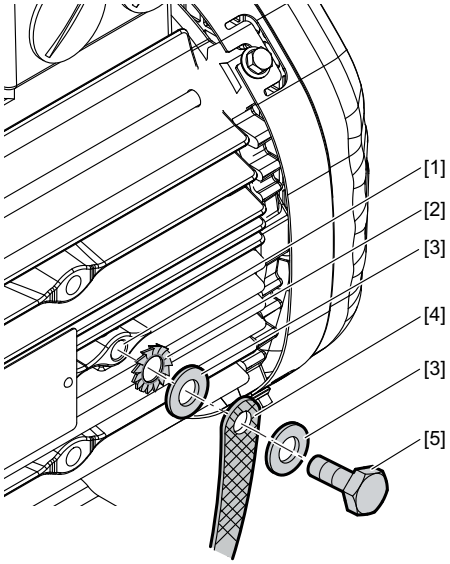

18014402064551947

[1] Use of the pre-cast bore at the stator housing
[2] Serrated lock washer
[3] Disk ISO 7093
[4] Ground strap (not included in the delivery)
[5] Self-tapping screw DIN 7500 M6 × 16, tightening torque 10 Nm

Sizes DR..100L – 132, DRN100L – 132S with HF(+LF) grounding

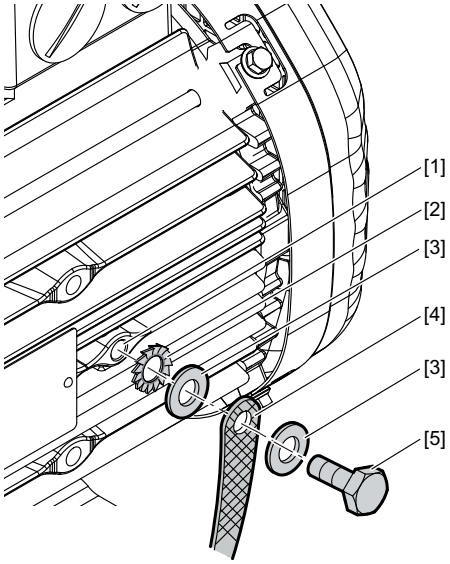

18014402064551947

[1] Use of tapped hole for lifting eyes
[2] Serrated lock washer DIN 6798
[3] Washer ISO 7089/ISO 7090
[4] Ground strap (not included in the delivery)
[5] Hex head screw ISO 4017 M8 × 18, tightening torque 10 Nm

22167811/EN – 04/2016

5.2.10 Installation above 1000 m amsl

MOVIMOT® drives with mains voltages of 200 – 240 V or 380 – 500 V can also be operated at an altitude of 1000 – 4000 m amsl. To do so, you must observe the following basic conditions.

- At heights above 1000 m amsl, the nominal continuous power is reduced due to reduced cooling: I_N reduction by 1% per 100 m.
- At altitudes of 2000 – 4000 m amsl you must take limiting measures which reduce the line side overvoltage from category III to category II for the entire system.

5.2.11 Protection devices

MOVIMOT® drives have integrated protection devices against overloads. External overload devices are not necessary.

5.2.12 UL-compliant installation

INFORMATION

Due to UL requirements, the following chapter is always printed in English independent of the language of the documentation.

Field wiring power terminals

Observe the following notes for UL-compliant installation:

- Use 60/75 °C copper wire only.
- Tighten terminals to 1.5 Nm (13.3 lb.in)

Short circuit current rating

Suitable for use on a circuit capable of delivering not more than 200,000 rms symmetrical amperes when protected as follows

For 240 V systems:

250 V minimum, 25 A maximum, non-semiconductor fuses

or 250 V minimum, 25 A maximum, inverse time circuit breakers

For 500 V systems:

500 V minimum, 25 A maximum, non-semiconductor fuses

or 500 V minimum, 25 A maximum, inverse time circuit breakers

The max. voltage is limited to 500 V.

Branch circuit protection

Integral solid state short circuit protection does not provide branch circuit protection. Branch circuit protection must be provided in accordance with the National Electrical Code and any additional local codes.

For maximum branch circuit protection see table below.

Series	non-semiconductor fuses	inverse time circuit breaker
MOVIMOT® MM..D	250 V/500 V minimum, 25 A maximum	250 V/500 V minimum, 25 A maximum

22167811/EN – 04/2016

Motor overload protection

MOVIMOT® MM..D is provided with load and speed-sensitive overload protection and thermal memory retention upon shutdown or power loss.

The trip current is adjusted to 140 % of the rated motor current.

Ambient temperature

MOVIMOT® MM..D is suitable for an ambient temperature of 40 °C, max. 60 °C with derated output current. To determine the output current rating at higher than 40 °C, the output current should be derated 3.0 % per °C between 40 °C and 60 °C.

- Only use certified units with a limited output voltage (V_{max} = DC 30 V) and limited output current (I ≤ 8 A) as an external DC 24 V voltage source.
- The UL certification only applies for the operation on voltage supply systems with voltages to ground of max. 300 V. The UL-certification does not apply to operation on voltage supply systems with a non-grounded star point (IT systems).

22167811/EN – 04/2016

5.3 Connection options of MOVIMOT® with integrated AS-Interface

5.3.1 Supply system and control

A design with AVSK plug connector

1 x M12 connector

Design	A1	A2
Type	**MM../AVSK**	**MM../AVSK**
AS-Interface options	**MLK30A, MLK31A**	**MLK30A, MLK31A, MLK32A**
Switch S5[1)]	0	1
24 V supply	Yellow AS-Interface cable	Black AUX PWR cable (double pick-off)
AS-Interface connection	Yellow AS-Interface cable	Yellow AS-Interface cable (double pick-off)
Line connection	Terminals	Terminals
Sensor connection	Terminals	Terminals

1) MOVIMOT® with MLK32A is not equipped with switch S5. MOVIMOT® with MLK32A is always supplied with 24 V via the AUX-PWR cable.

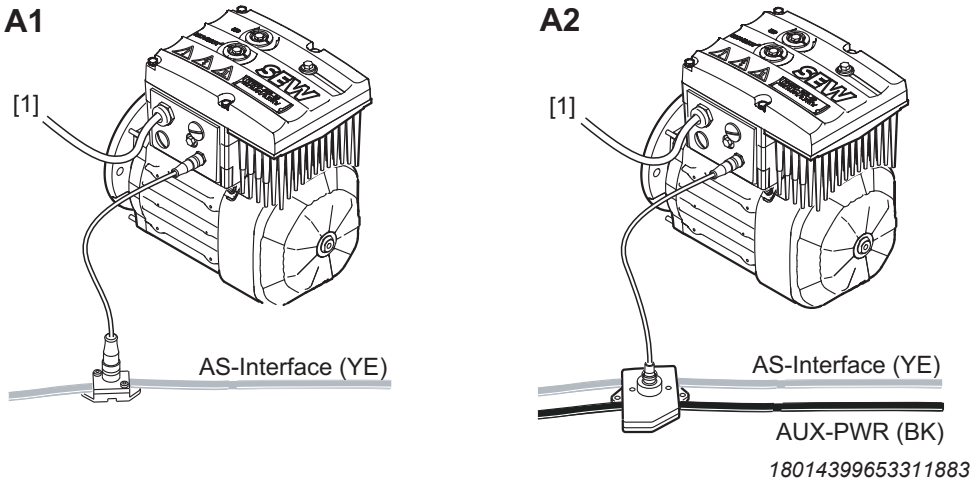

[1] Supply system

22167811/EN – 04/2016

B design connection option with AZSK plug connector

3 x M12 connector

Design	B1	B2	B3
Type	**MM../AZSK**	**MM../AZSK**	**MM../AZSK**
AS-Interface options	**MLK30A, MLK31A**		
Switch S5	1	1	0
24 V supply	Black AUX PWR cable	Black AUX PWR cable (double pick-off)	Yellow AS-Interface cable
AS-Interface connection	Yellow AS-Interface cable	Yellow AS-Interface cable (double pick-off)	Yellow AS-Interface cable
Line connection	Terminals	Terminals	Terminals
Sensor connection	1 x M12 plug connector (DI2 + DI3)	1 x M12 plug connector (DI2 + DI3)	1 x M12 plug connector (DI2 + DI3)

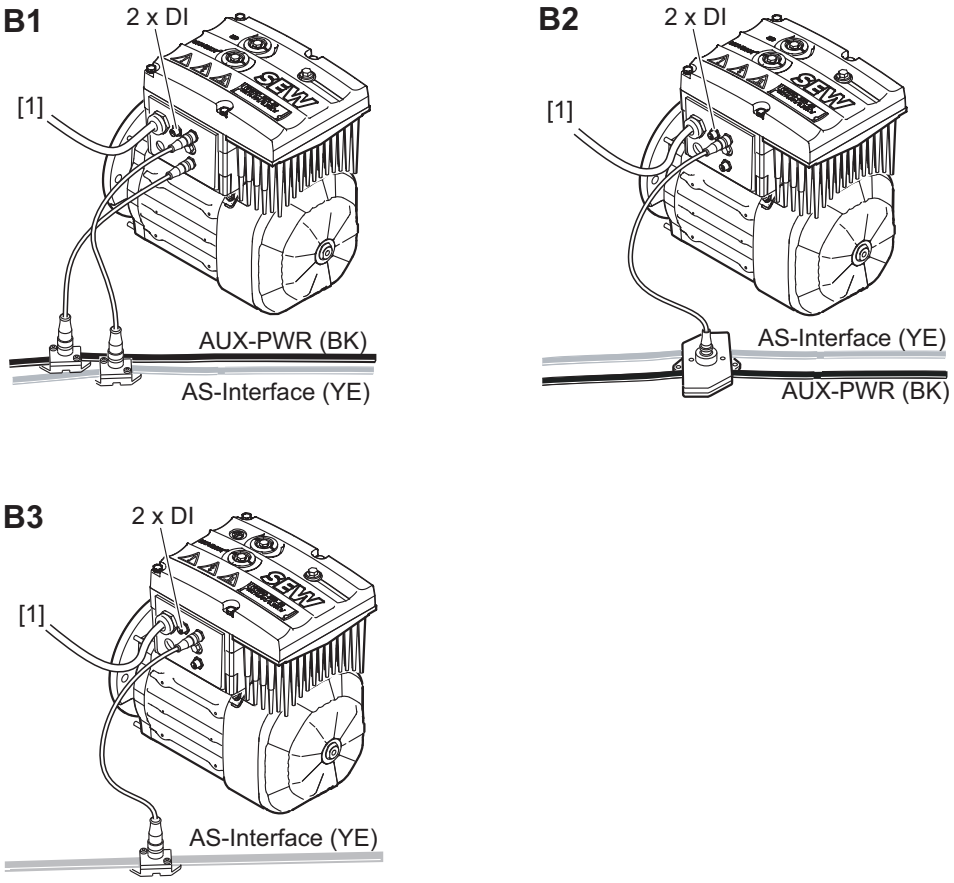

18014399653343499

[1] Supply system

22167811/EN – 04/2016

C design with AND3/AZSK plug connector

3 x M12 connector, 1 x Han® Q8/0

Design	C1	C2	C3
Type	**MM../AND3/AZSK**	**MM../AND3/AZSK**	**MM../AND3/AZSK**
AS-Interface options	**MLK30A, MLK31A**		
Switch S5	1	1	0
24 V supply	Black AUX PWR cable	Black AUX PWR cable (double pick-off)	Yellow AS-Interface cable
AS-Interface connection	Yellow AS-Interface cable	Yellow AS-Interface cable (double pick-off)	Yellow AS-Interface cable
Line connection	AND3 plug connector	AND3 plug connector	AND3 plug connector
Sensor connection	1 x M12 plug connector (DI2 + DI3)	1 x M12 plug connector (DI2 + DI3)	1 x M12 plug connector (DI2 + DI3)

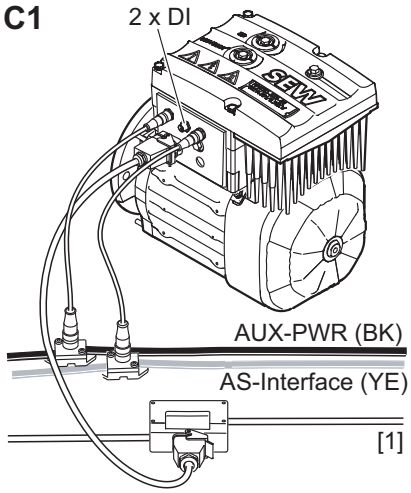

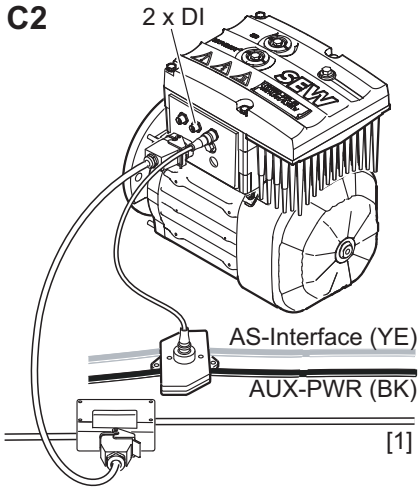

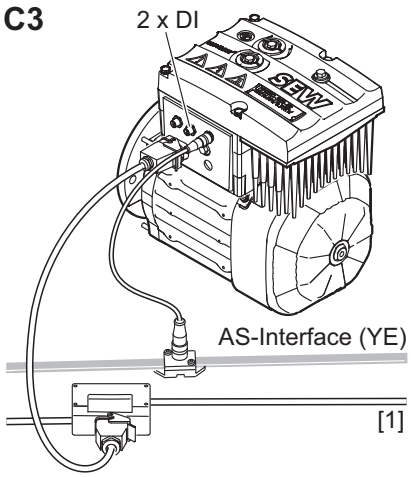

18014399653377419

[1] Supply system

22167811/EN – 04/2016

D design connection option with AZZK plug connector

3 x M12 connector, (1 x Han® Q8/0)

Design	D1	D2	D3	D4
Type	**MM../AZZK**	**MM../AZZK**	**MM../AND3/AZZK**	**MM../AND3/AZZK**
AS-Interface options	**MLK30A, MLK31A**	**MLK30A, MLK31A, MLK32A**	**MLK30A, MLK31A**	**MLK30A, MLK31A, MLK32A**
Switch S5[1)]	0	1	0	1
24 V supply	Yellow AS-Interface cable	Black AUX PWR cable (double pick-off)	Yellow AS-Interface cable	Black AUX PWR cable (double pick-off)
AS-Interface connection	Yellow AS-Interface cable	Yellow AS-Interface cable (double pick-off)	Yellow AS-Interface cable	Yellow AS-Interface cable (double pick-off)
Line connection	Terminals	Terminals	AND3 plug connector	AND3 plug connector
Sensor connection	2 x M12 plug connector (1 x DI2 + 1 x DI3)	2 x M12 plug connector (1 x DI2 + 1 x DI3)	2 x M12 plug connector (1 x DI2 + 1 x DI3)	2 x M12 plug connector (1 x DI2 + 1 x DI3)

1) MOVIMOT® with MLK32A is not equipped with switch S5. MOVIMOT® with MLK32A is always supplied with 24 V via the AUX-PWR cable.

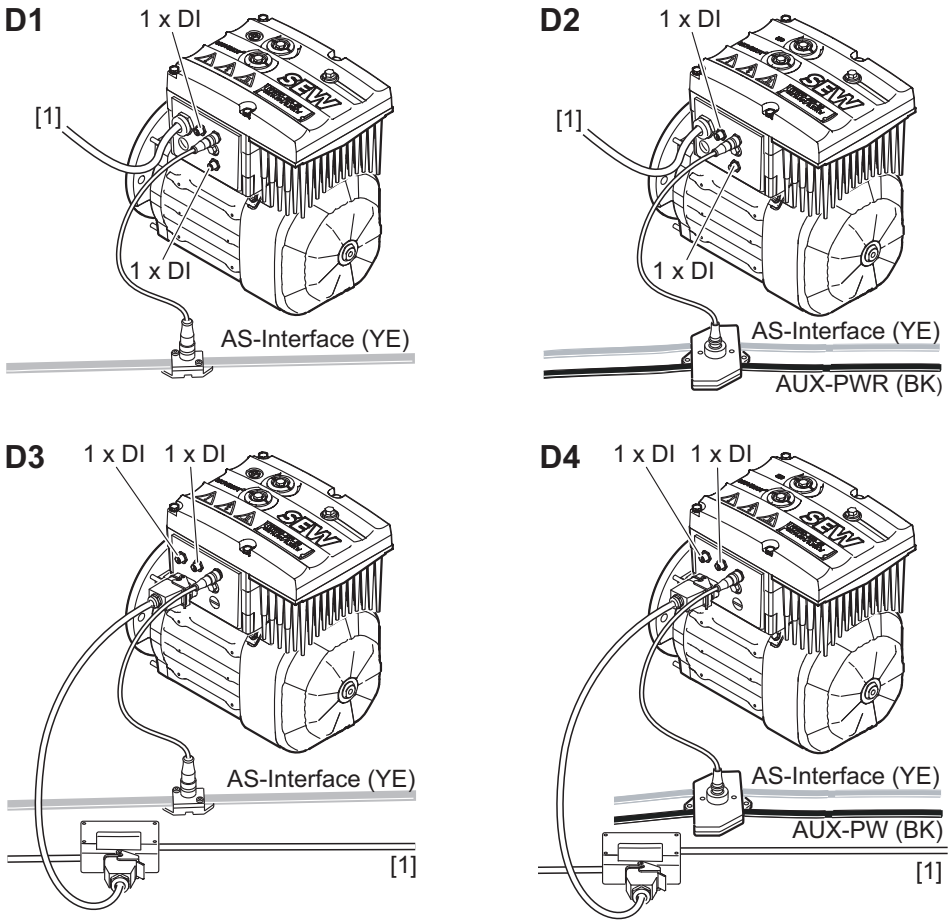

27021598953068299

[1] Supply system

E design with AZFK plug connector

3 x M12 connector

Design	E1
Type	MM../AZFK
AS-Interface options	MLK32A
24 V supply	Black AUX PWR cable
AS-Interface connection	Yellow AS-Interface cable
Line connection	Terminals
Sensor connection	1 x M12 plug connector (DI2 + DI3)

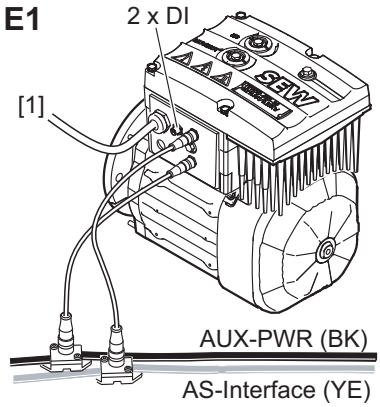

15527166091

22167811/EN – 04/2016

5.4 Connection of MOVIMOT® MM../AVSK (connection option A)

The following figure shows the connection in MM../AVSK design:

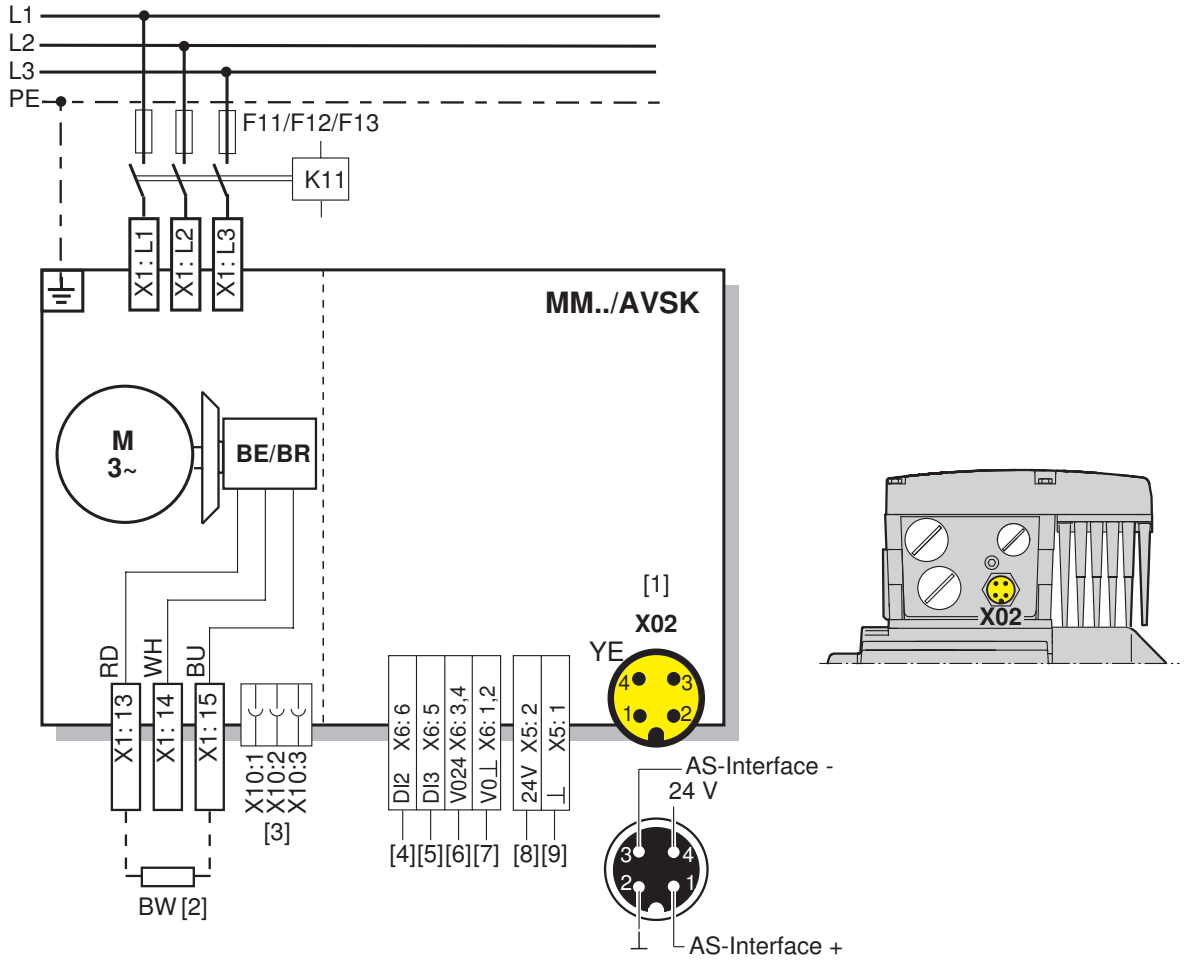

36028798139859083

AVSK plug connector			
[1]	**X02:** M12 plug connector (male, yellow)	1 AS-Interface +	AS-Interface data cable +
		2 0 V	Reference potential AUX PWR
		3 AS-Interface -	AS-Interface data cable -
		4 24 V	24 V supply AUX PWR

[2] BW.. braking resistor (only for MOVIMOT® without mechanical brake)
[3] Plug connector for connecting the BEM option
[4] DI2 sensor input
[5] DI3 sensor input
[6] 24 V voltage supply for sensors
[7] 0 V reference potential for sensors
[8] 24 V supply AUX PWR (only for MLK30A and MLK31A)
[9] Reference potential AUX PWR (only for MLK30A and MLK31A)

22167811/EN – 04/2016

5.5 Connection of MOVIMOT® MM../AZSK (connection option B)

The following figure shows the connection in MM../AZSK design:

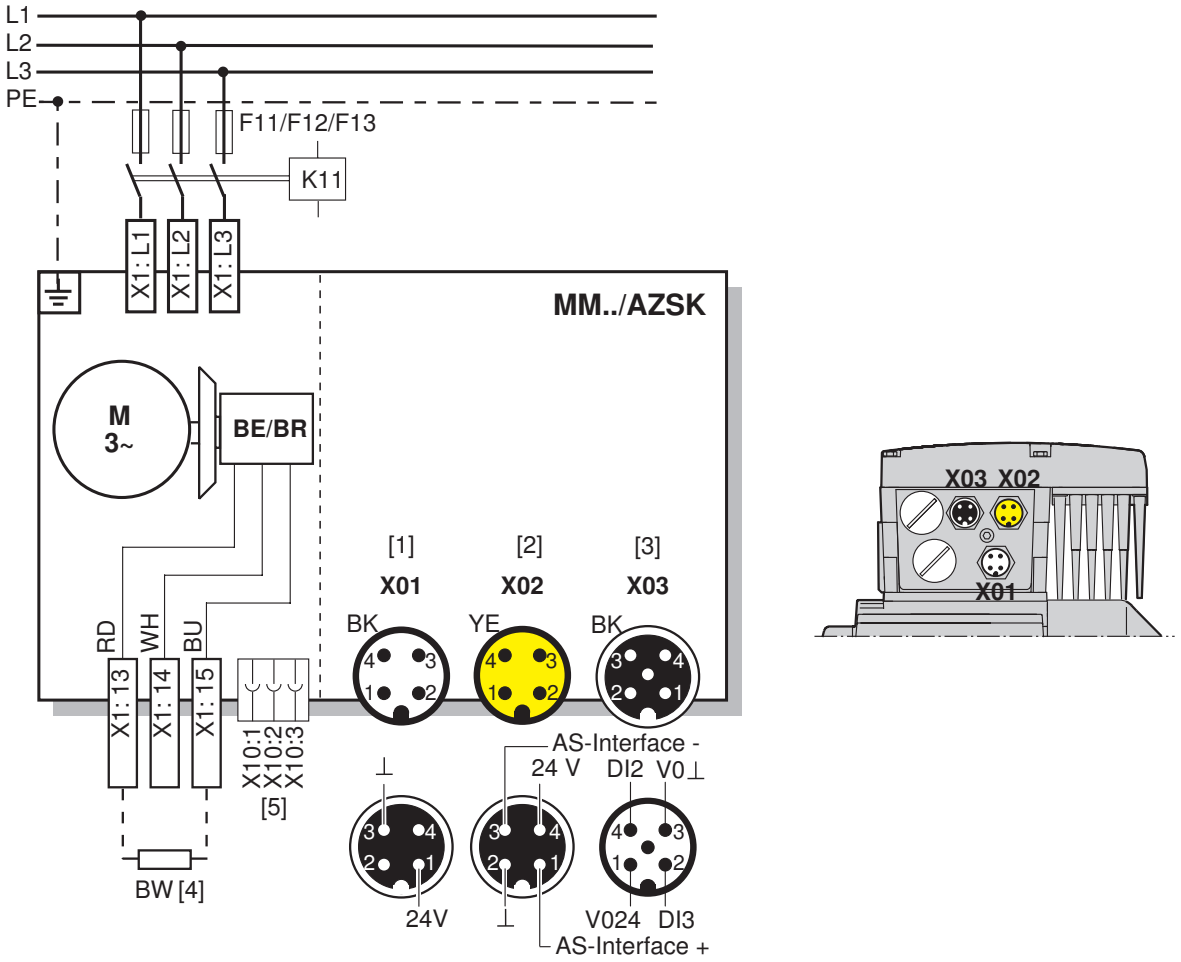

27021598887228043

AZSK plug connector			
[1]	**X01:** M12 plug connector (male, black)	1 24 V	24 V supply (AUX PWR)
		2 N.C.	Not connected
		3 0 V	Reference potential AUX PWR
		4 N.C.	Not connected
[2]	**X02:** M12 plug connector (male, yellow)	1 AS-Interface +	AS-Interface data cable +
		2 0 V	Reference potential AUX PWR
		3 AS-Interface -	AS-Interface data cable -
		4 24 V	24 V supply (AUX PWR)
[3]	**X03:** M12 plug connector (female, black)	1 V024	24 V voltage supply for sensors
		2 DI3	DI3 sensor input
		3 V0⊥	0 V reference potential for sensors
		4 DI2	DI2 sensor input
		5 PE	PE

[4] BW.. braking resistor (only for MOVIMOT® without mechanical brake)

[5] Plug connector for connecting the BEM option

22167811/EN – 04/2016

5.6 Connection of MOVIMOT® MM../AND3/AZSK (connection option C)

The following figure shows the connection in MM../AND3/AZSK design:

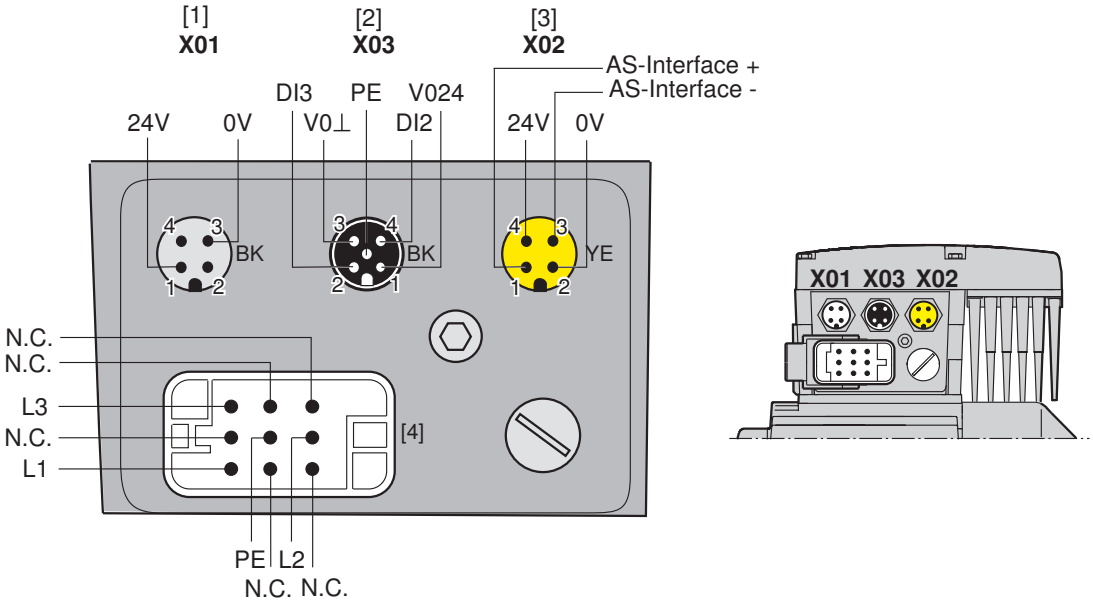

36028798143076363

AZSK plug connector			
[1]	**X01:** M12 plug connector (male, black)	1 24 V	24 V supply (AUX PWR)
		2 N.C.	Not connected
		3 0 V	Reference potential AUX PWR
		4 N.C.	Not connected
[2]	**X03:** M12 plug connector (female, black)	1 V024	24 V voltage supply for sensors
		2 DI3	DI3 sensor input
		3 V0⊥	0 V reference potential for sensors
		4 DI2	DI2 sensor input
		5 PE	PE
[3]	**X02:** M12 plug connector (male, yellow)	1 AS-Interface +	AS-Interface data cable +
		2 0 V	Reference potential AUX PWR
		3 AS-Interface -	AS-Interface data cable -
		4 24 V	24 V supply (AUX PWR)

AND3 plug connector			
[4]	AND3 plug connector (male)	1 N.C.	Not connected (reserved for N)
		2 L2	L2 line connection
		3 N.C.	Not connected
		4 N.C.	Not connected
		5 N.C.	Not connected
		6 L3	Line connection L3
		7 N.C.	Not connected
		8 L1	Line connection L1
		PE	PE

22167811/EN – 04/2016

5.7 Connection of MOVIMOT® MM../AZZK (connection option D1/D2)

The following figure shows the connection in MM../AZZK design:

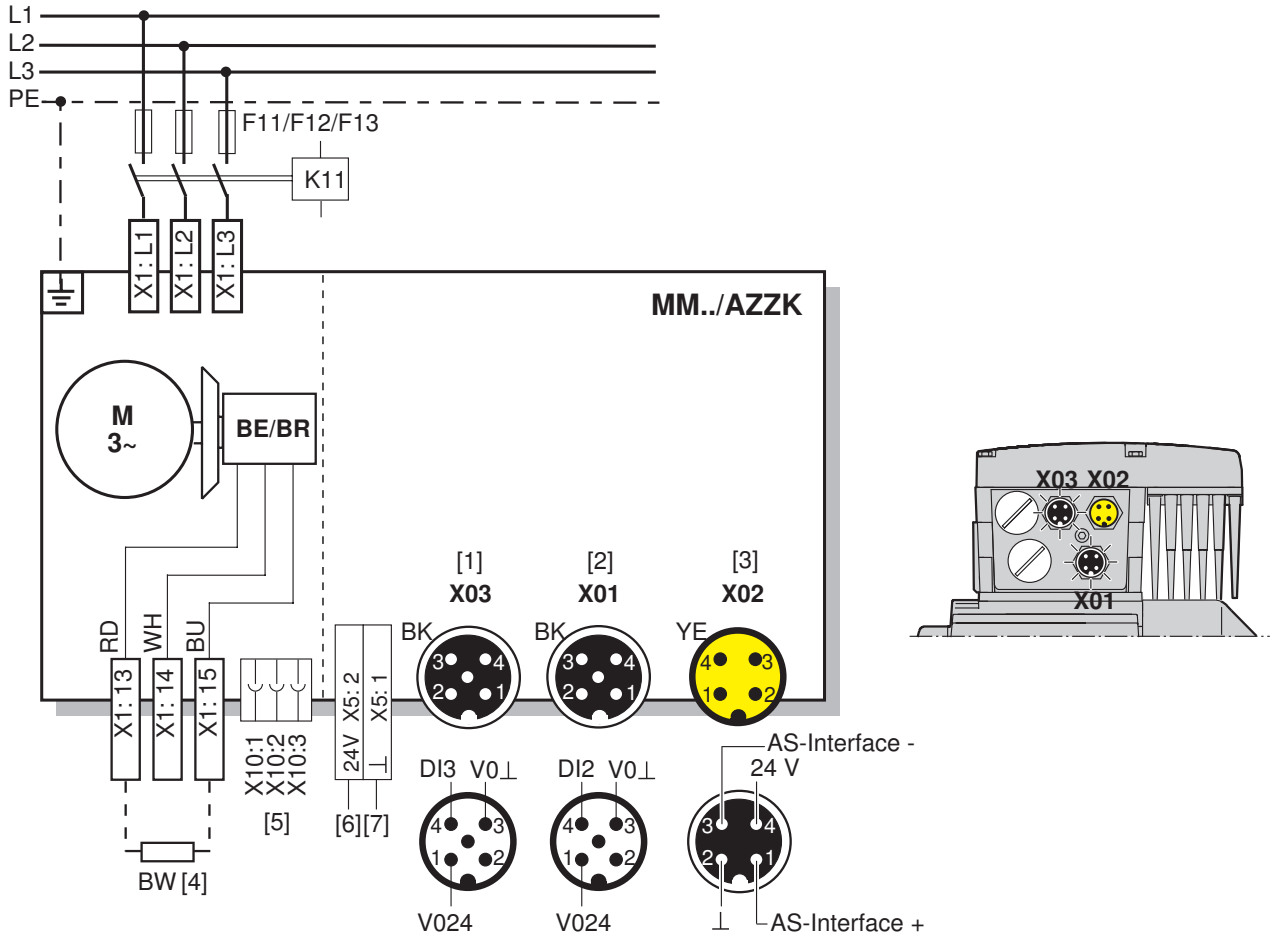

36028798773382667

AZZK plug connector			
[1]	**X03:** M12 plug connector (female, black)	1 V024	24 V voltage supply for sensors
		2 N.C.	Not connected
		3 V0⊥	0 V reference potential for sensors
		4 DI3	DI3 sensor input
		5 PE	PE
[2]	**X01:** M12 plug connector (socket, black)	1 V024	24 V voltage supply for sensors
		2 N.C.	Not connected
		3 V0⊥	0 V reference potential for sensors
		4 DI2	DI2 sensor input
		5 PE	PE
[3]	**X02:** M12 plug connector (male, yellow)	1 AS-Interface +	AS-Interface data cable +
		2 0 V	Reference potential AUX PWR
		3 AS-Interface -	AS-Interface data cable -
		4 24 V	24 V supply AUX PWR

[4] BW.. braking resistor (only for MOVIMOT® without mechanical brake)
[5] Plug connector for connecting the BEM option
[6] 24 V supply AUX PWR (only for MLK30A and MLK31A)
[7] Reference potential AUX PWR (only for MLK30A and MLK31A)

22167811/EN – 04/2016

5.8 Connection of MOVIMOT® MM../AND3/AZZK (connection option D3/D4)

The following figure shows the connection in MM../AND3/AZZK design:

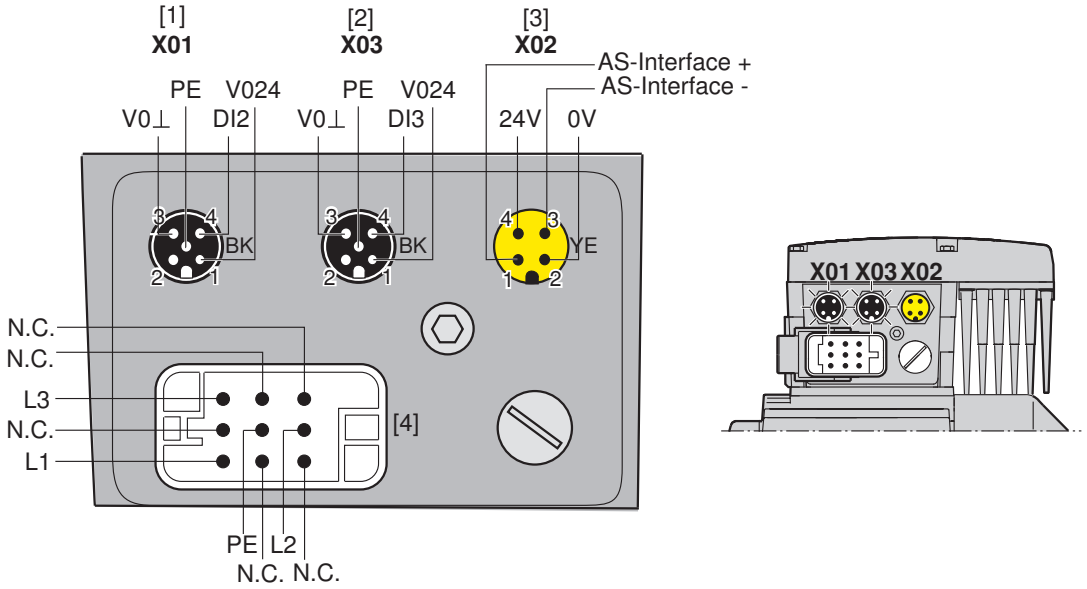

36028798209321611

AZZK plug connector			
[1]	**X01:** M12 plug connector (female, black)	1 V024	24 V voltage supply for sensors
		2 N.C.	Not connected
		3 V0⊥	0 V reference potential for sensors
		4 DI2	DI2 sensor input
		5 PE	PE
[2]	**X03:** M12 plug connector (female, black)	1 V024	24 V voltage supply for sensors
		2 N.C.	Not connected
		3 V0⊥	0 V reference potential for sensors
		4 DI3	DI3 sensor input
		5 PE	PE
[3]	**X02:** M12 plug connector (male, yellow)	1 AS-Interface +	AS-Interface data cable +
		2 0 V	Reference potential AUX PWR
		3 AS-Interface -	AS-Interface data cable -
		4 24 V	24 V supply (AUX PWR)

AND3 plug connector			
[4]	AND3 plug connector (connector)	1 N.C.	Not connected (reserved for N)
		2 L2	L2 line connection
		3 N.C.	Not connected
		4 N.C.	Not connected
		5 N.C.	Not connected
		6 L3	Line connection L3
		7 N.C.	Not connected
		8 L1	Line connection L1
		PE	PE

22167811/EN – 04/2016

5.9 Connection of MOVIMOT® MM../AZFK (connection option E)

The following figure shows the connection in MM../AZFK design:

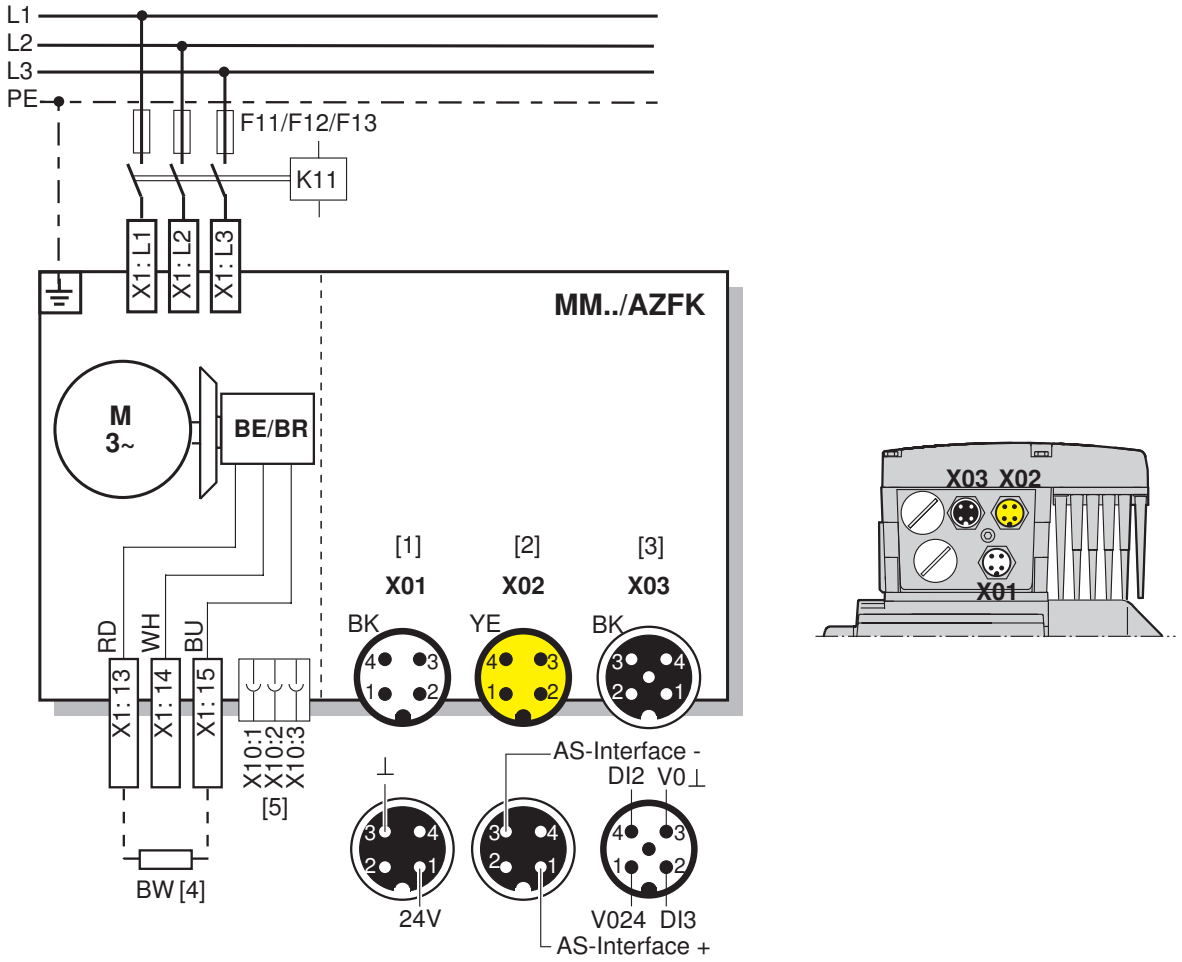

9007214781950219

AZFK plug connector			
[1]	**X01:** M12 plug connector (male, black)	1 24 V	24 V supply (AUX PWR)
		2 N.C.	Not connected
		3 0 V	Reference potential AUX PWR
		4 N.C.	Not connected
[2]	**X02:** M12 plug connector (male, yellow)	1 AS-Interface +	AS-Interface data cable +
		2 N.C.	Not connected
		3 AS-Interface -	AS-Interface data cable -
		4 N.C.	Not connected
[3]	**X03:** M12 plug connector (female, black)	1 V024	24 V voltage supply for sensors
		2 DI3	DI3 sensor input
		3 V0⊥	0 V reference potential for sensors
		4 DI2	DI2 sensor input
		5 PE	PE

[4] BW.. braking resistor (only for MOVIMOT® without mechanical brake)

[5] Plug connector for connecting the BEM option

22167811/EN – 04/2016

5.10 Connection between MOVIMOT® and motor when mounted close to the motor

If the MOVIMOT® inverter is mounted close to the motor, the connection to the motor is realized with a pre-fabricated hybrid cable.

Only use hybrid cables from SEW-EURODRIVE for the connection between the MOVIMOT® inverter and the motor.

5.10.1 Implementing the motor protection

The implementation of the motor protection and the possible motor plug connectors depend on the selected connection option:

Connection option	Implementing motor protection	Motor plug connector
• **MM../AVSK**	TH motor protection (bimetallic thermostat). Connection at sensor input DI2	• APG4 • ALA4 • Terminals
	Motor protection by thermal motor protection model. Activated by parameters *P340* and *P347*. See chapter "Motor protection" (→ 🗎 95).	• APGX • Terminals
• **MM../AZSK** • **MM../AND3/AZSK** • **MM../AZZK** • **MM../AND3/AZZK** • **MM../AZFK**	Motor protection by thermal motor protection model. Activated by parameters *P340* and *P347*. See chapter "Motor protection" (→ 🗎 95).	• APGX • Terminals

22167811/EN – 04/2016

5.10.2 Overview of connection between MOVIMOT® and motor with mounting close to the motor

MOVIMOT® inverter	Connection cable	Drive
MM../P2.A/RO.A/APG4 **MM../P2.A/RO.A/APGX** 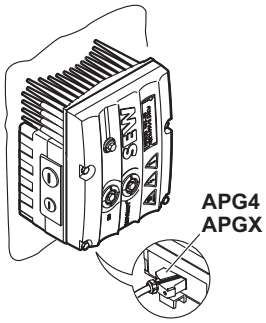	Part number DR.71 – DR.100: 01867423 Part number DR.112 – DR.132: 18116620 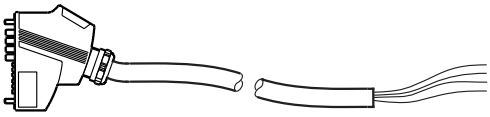	AC motors with cable gland 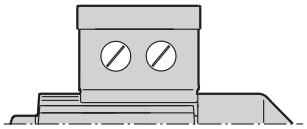
	Part number: 05930766 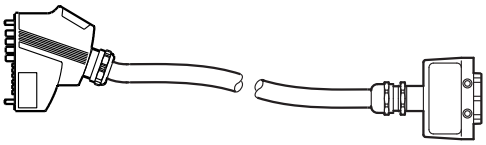	AC motors with ASB4 plug connector 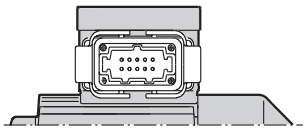
	Part number: 05932785 (⅄) Part number: 08163251 (△) 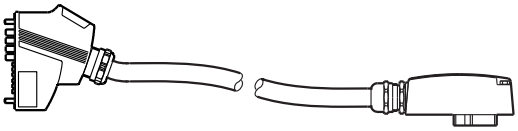	AC motors with ISU4 plug connectors size DR.63 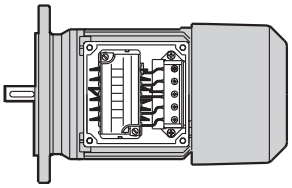
	Part number: 05937558 (⅄) Part number: 0816326X (△) 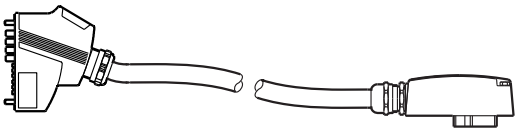	AC motors with ISU4 plug connectors size DR.71 – 132 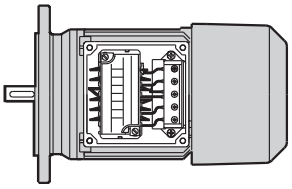
MM../P2.A/RE.A/ALA4 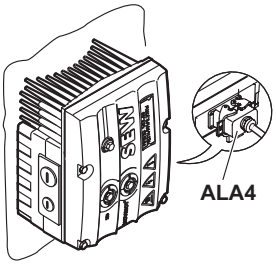	Part number: 08179484 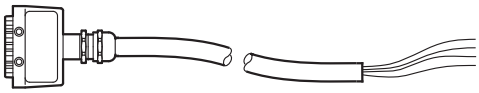	AC motors with cable gland 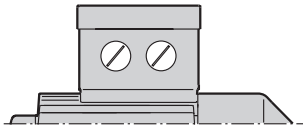
	Part number: 08162085 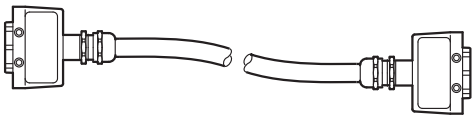	AC motors with ASB4 plug connector 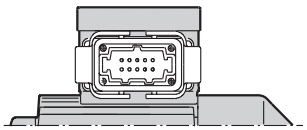

22167811/EN – 04/2016

5.10.3 Hybrid cable connection

The following table shows the conductor assignment of the hybrid cables with part numbers 01867423 and 08179484 and the corresponding motor terminals of the DR.. motor:

Motor terminal DR.. motor	Wire color/hybrid cable designation
U1	Black/U1
V1	Black/V1
W1	Black/W1
4a	Red/13
3a	White/14
5a	Blue/15
1b	Black/1
2b	Black/2
PE connection	Green/yellow + shield end (inner shield)

The following figure shows how to connect the hybrid cable to the terminal box of the DR.. motor.

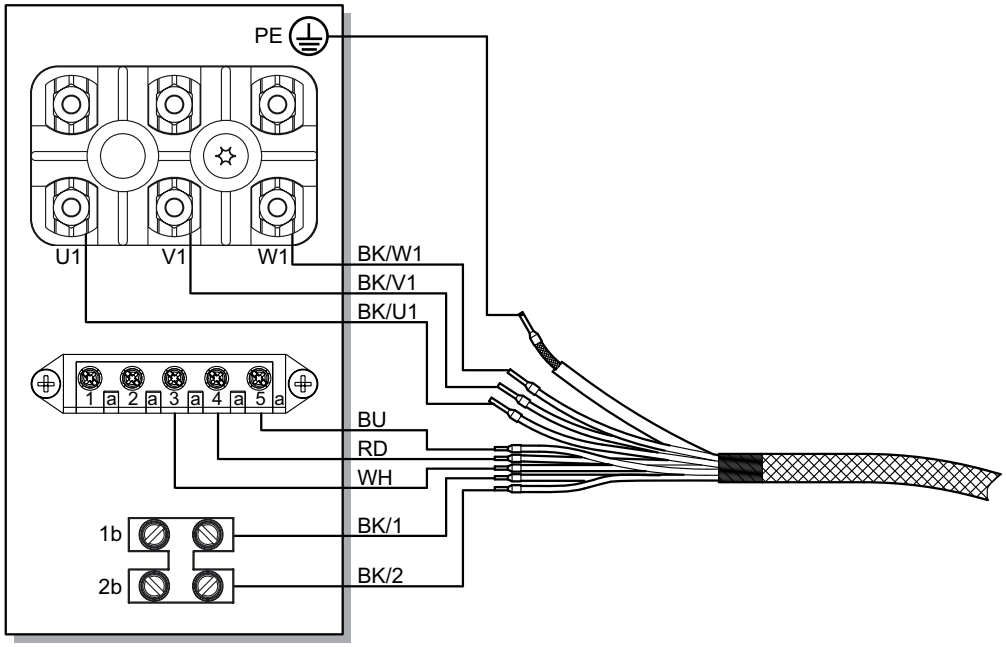

9007200445548683

INFORMATION

Do not install an external brake rectifier with brakemotors

With brakemotors, the MOVIMOT® inverter controls the brake directly

5.11 Connection of MOVIMOT® options

5.11.1 Connecting the MLU13A option

For more information about mounting the MLU13A option, refer to chapter "Installing option MLU13A" (→ 🗎 26).

The following figure shows how to connect the MLU13A option:

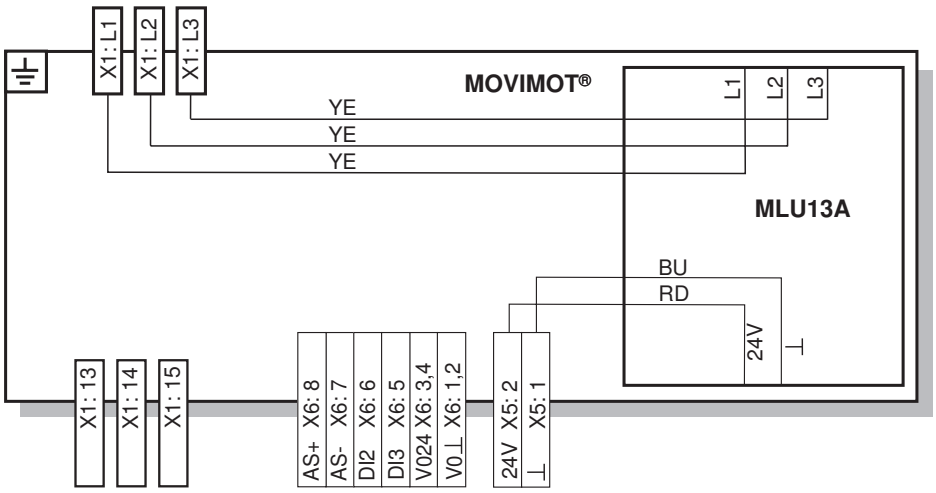

18014399633819275

22167811/EN – 04/2016

5.11.2 Connection of MNF21A option

INFORMATION

Installation is only permitted in combination with the modular connection box of MOVIMOT® MM03D-503-00 – MM15D-503-00.

For more information about mounting the MNF21A option, refer to chapter "Installation of option MNF21A" (→ 🗎 27).

The following figure shows how to connect the MNF21A option:

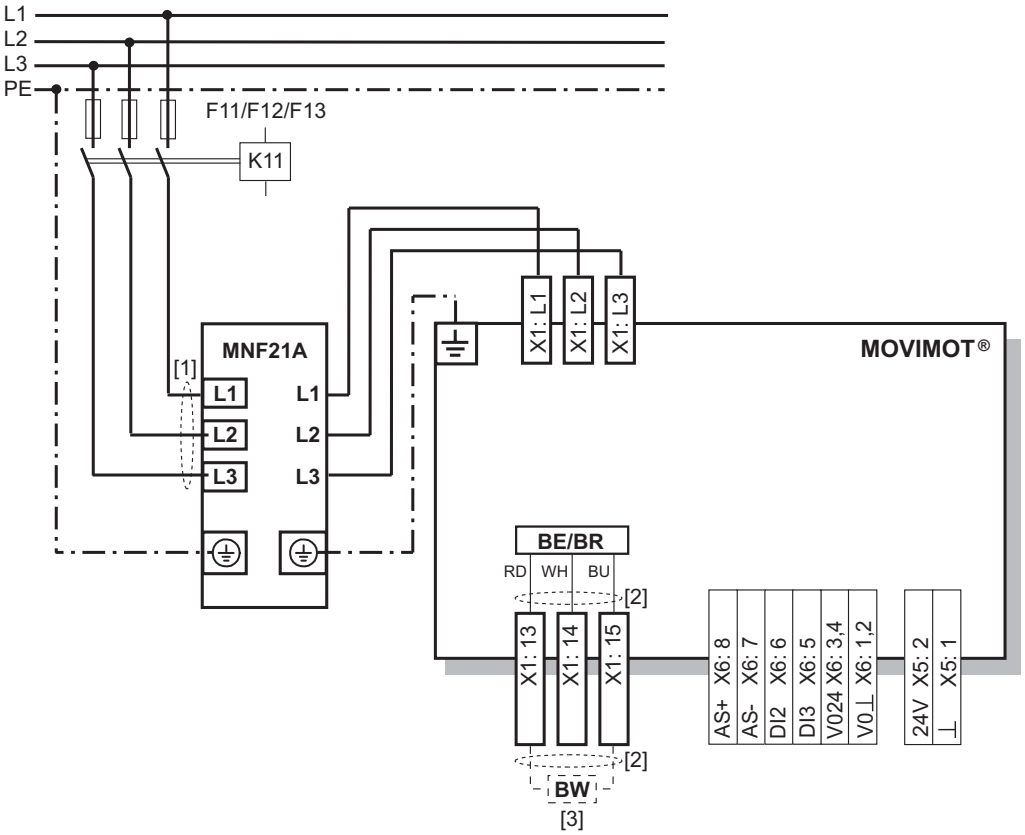

9007201009192715

[1] Keep the cable length for the power supply as short as possible.
[2] Keep the length of the brake cables as short as possible.
Do not route the brake cables in parallel, but as far away from the power supply cables as possible.
[3] BW braking resistor (only in MOVIMOT® without mechanical brake)

22167811/EN – 04/2016

5.11.3 Connecting the URM option

For more information about mounting the URM option, refer to chapter "Installation of URM/BEM options" (→ 🗎 28).

The following figure shows how to connect the URM option:

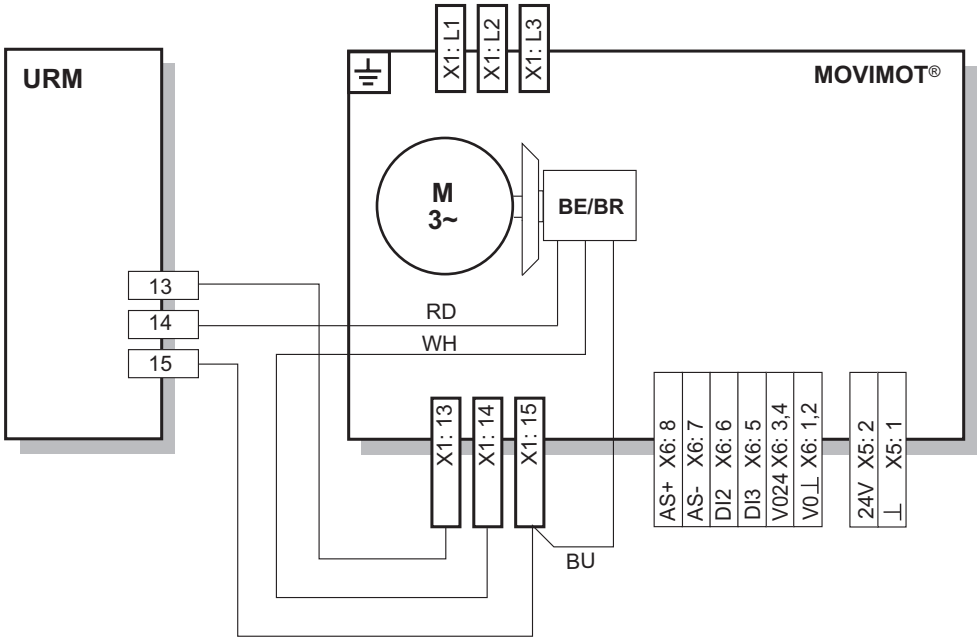

9007200379343371

22167811/EN – 04/2016

5.11.4 Connecting the BEM option

For more information about mounting the BEM option, refer to chapter "Installation of URM/BEM options" (→ 🗎 28).

The following figure shows how to connect the BEM option:

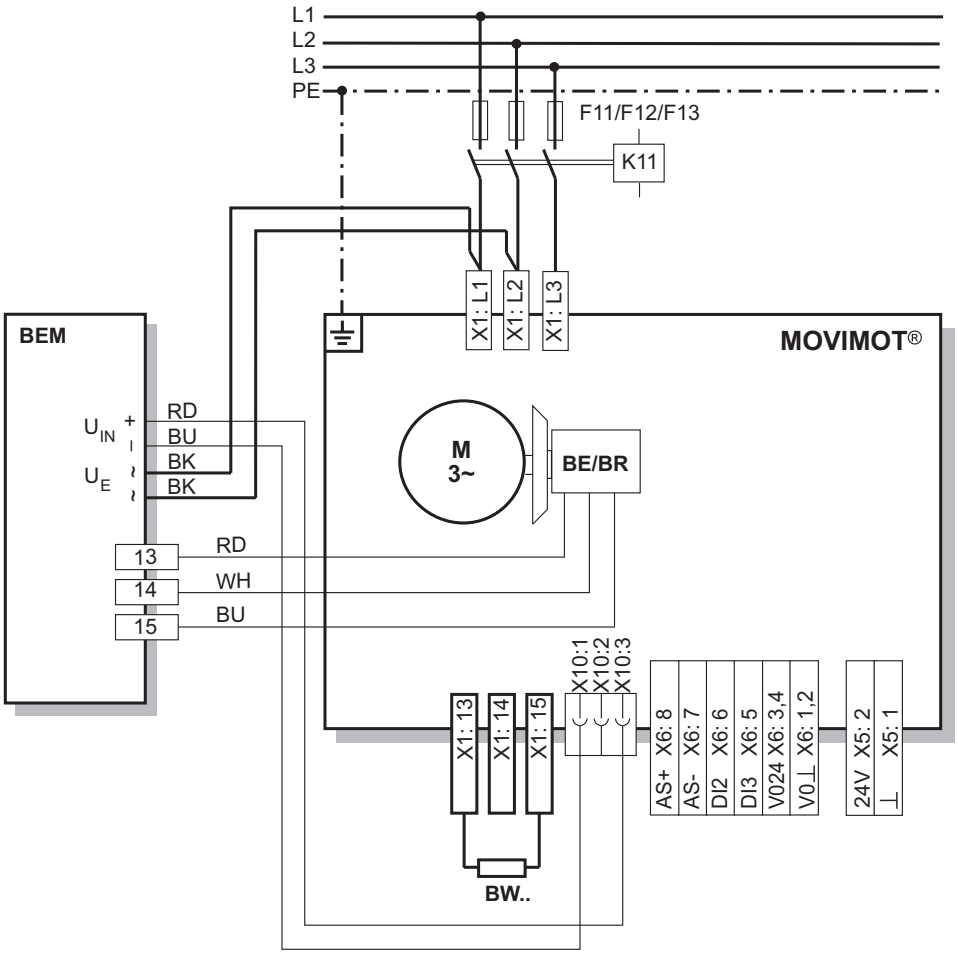

9007200379634187

5.11.5 Connection of forced cooling fan V

The AC motors of the DR.. series are available with optional forced cooling fan V and MOVIMOT® with MLK30A/MLK31A (only with plug connector AVSK or AZZK). The use of the V forced cooling fan expands the setting range of the setpoint speed. This means that speeds from 150 min^{-1} (5 Hz) can be realized continuously. The following figure shows the routing of the forced cooling fan cable:

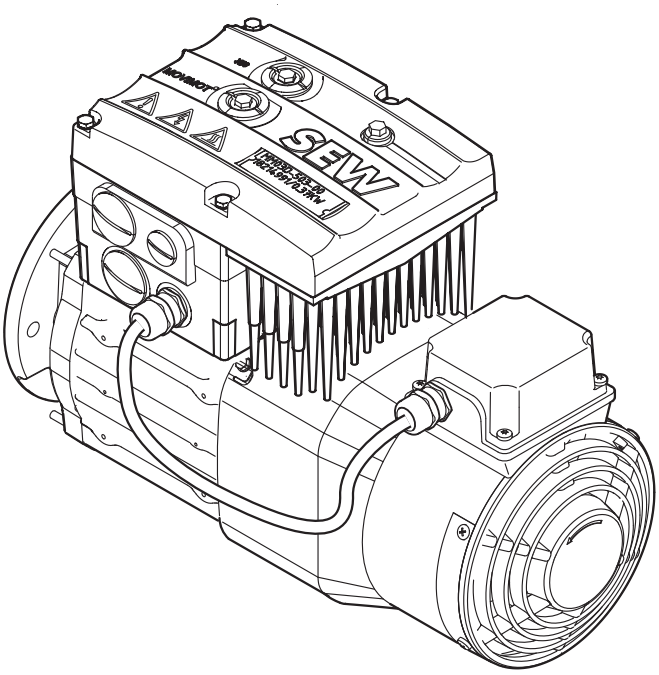

9007202424404491

The following figure shows an example for the connection of the V forced cooling fan:

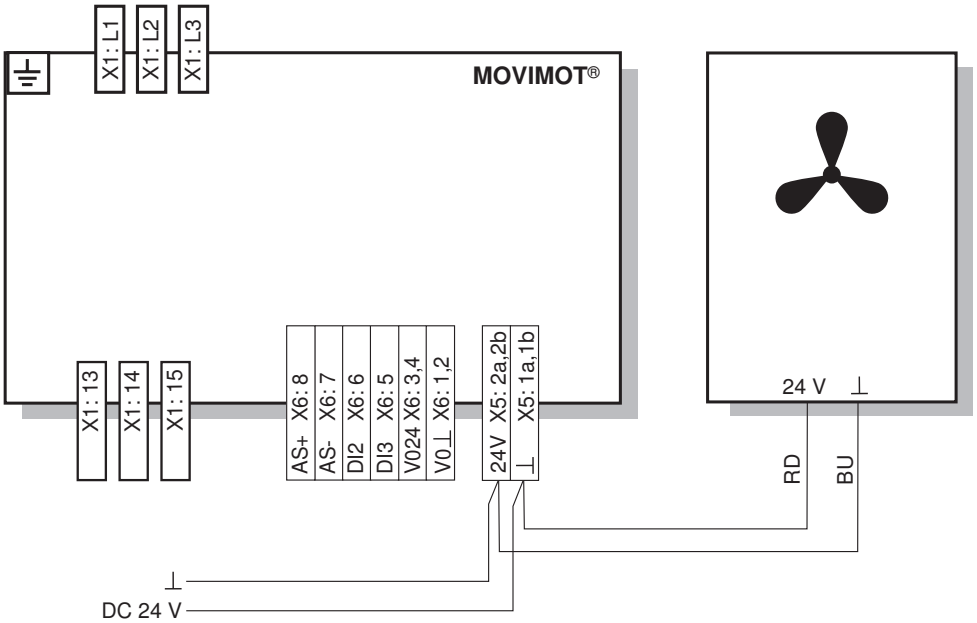

12877542667

For motors with V forced cooling fans, the parameter *P341 type of cooling* must be set to "forced air cooling".

22167811/EN – 04/2016

5.12 Connection of DBG keypad

MOVIMOT® drives are equipped with an X50 diagnostic interface (RJ10 plug connector) for startup, parameterization and service.

The X50 diagnostic interface is located underneath the screw plug on top of the MOVIMOT® inverter.

You must remove the screw plug before plugging in the connector into the diagnostic interface.

⚠ **WARNING!** Risk of burns due to hot surfaces of the MOVIMOT® drive (especially the heat sink). Serious injuries.
Wait for the MOVIMOT® drive to cool down sufficiently before touching it.

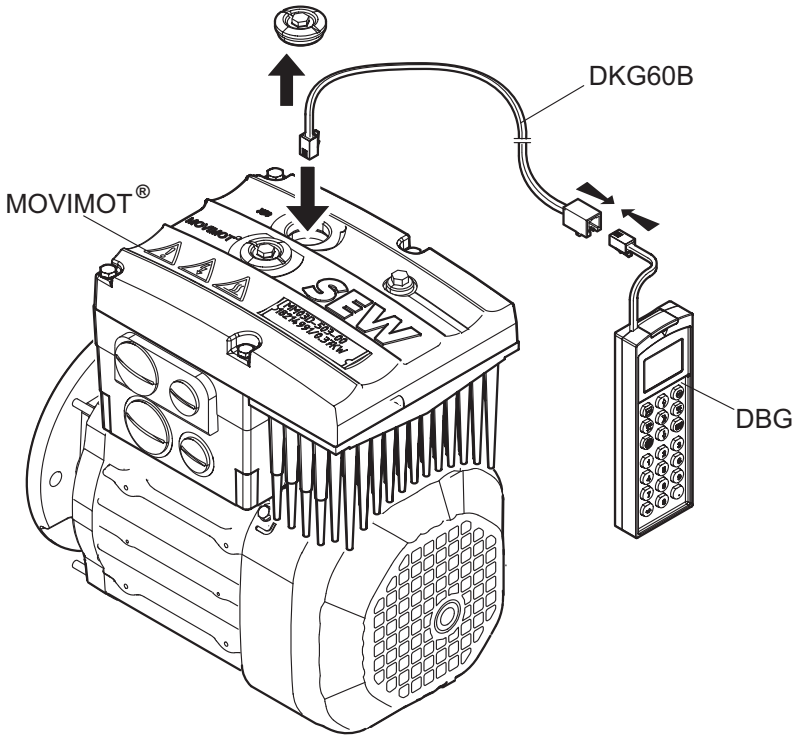

18014399653617291

You can also connect the DBG keypad to the MOVIMOT® drive using option DKG60B (5 m extension cable).

Extension cable	Description (= scope of delivery)	Part number
DKG60B	• Length 5 m • 4-core, shielded cable (AWG26)	08175837

22167811/EN – 04/2016

5.13 PC/laptop connection

MOVIMOT® drives are equipped with an X50 diagnostic interface (RJ10 plug connector) for startup, parameterization and service.

The diagnostic interface [1] is located underneath the screw plug on top of the MOVIMOT® inverter.

You must remove the screw plug before plugging in the connector into the diagnostic interface.

⚠ **WARNING!** Risk of burns due to hot surfaces of the MOVIMOT® drive (especially the heat sink). Serious injuries.
Wait for the MOVIMOT® drive to cool down sufficiently before touching it.

The diagnostic interface can be connected to a commercially available PC/laptop via the USB11A interface adapter (part number 08248311).

Scope of delivery:

- Interface adapter USB11A
- Cable with RJ10 plug connector
- USB interface cable

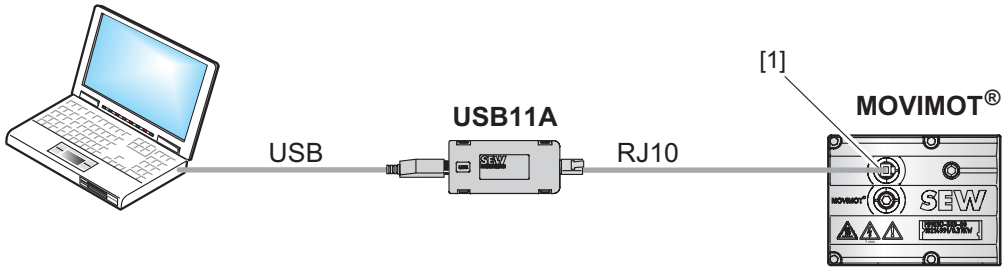

9007199713527051

22167811/EN – 04/2016

6 Startup of MOVIMOT® with MLK.. in Easy mode

INFORMATION

When selecting Easy mode, you start up MOVIMOT® using DIP switches S1, S2 and switches f2, t1, quick and easy.

6.1 Overview

You can select one of the following modes for starting up MOVIMOT® with AS-Interface:

Startup in Easy mode

When selecting Easy mode, you start up MOVIMOT® using DIP switches S1, S2 and switches f2, t1, quick and easy.

Observe the following chapter during startup:

- For MOVIMOT® with **MLK30A** in Easy mode:
  - Chapter "Startup of MOVIMOT® with MLK.. in Easy mode" (→ 🗎 65)

Startup in Easy mode

An extended scope of parameters is available for startup in Expert mode. You can use the MOVITOOLS® MotionStudio software or the DGB keypad to adjust the parameters to the application.

The startup in Expert mode depends on the AS-Interface option of the MOVIMOT® drive.

Observe the following chapters during startup:

- For MOVIMOT® with **MLK30A** in Expert mode:
  - Chapter "Startup of MOVIMOT® with MLK.. in Easy mode" (→ 🗎 65)
    (only description of control elements, DIP switch, additional functions)
  - Chapter "Startup of MOVIMOT® with MLK.. in Expert mode" (→ 🗎 97)
  - Chapter "Startup of MLK30A" (→ 🗎 137)
- For MOVIMOT® with **MLK31A** in Expert mode:
  - Chapter "Startup of MOVIMOT® with MLK.. in Easy mode" (→ 🗎 65)
    (only description of control elements, DIP switch, additional functions)
  - Chapter "Startup of MOVIMOT® with MLK.. in Expert mode" (→ 🗎 97)
  - Chapter "Startup of MLK31A" (→ 🗎 145)
- For MOVIMOT® with **MLK32A** in Expert mode:
  - Chapter "Startup of MOVIMOT® with MLK.. in Easy mode" (→ 🗎 65)
    (only description of control elements, DIP switch, additional functions)
  - Chapter "Startup of MOVIMOT® with MLK.. in Expert mode" (→ 🗎 97)
  - Chapter "Startup of MLK32A" (→ 🗎 191)

22167811/EN – 04/2016

6.2 General information concerning startup

INFORMATION

You must comply with the general safety notes in the chapter "Safety notes" during startup.

⚠ WARNING

Risk of crushing due to missing or defective protective covers.

Severe or fatal injuries.

- Install the protective covers of the plant according to the instructions, also see the operating instructions of the gear unit.
- Never start the unit if the protective covers are not installed.

⚠ WARNING

Electric shock from capacitors that have not been fully discharged.

Severe or fatal injuries.

- Disconnect the inverter from the power. Observe the minimum switch-off time after disconnection from the supply system:
  - **1 minute**

⚠ WARNING

Device malfunction due to incorrect device setting.

Severe or fatal injuries.

- Comply with the startup instructions.
- The installation must be carried out by qualified personnel only.
- Always use the appropriate functional settings.

⚠ WARNING

Danger of burns due to hot surfaces of the unit (e.g. the heat sink).

Serious injuries.

- Do not touch the unit until it has cooled down sufficiently.

INFORMATION

To ensure fault-free operation, do not disconnect or connect power or signal lines during operation.

INFORMATION

- Remove the paint protection caps from the status LED and the two AS-Interface LEDs before startup. Remove paint protection film from the nameplates before startup.
- Observe a minimum switch-off time of 2 seconds for the K11 line contactor.

22167811/EN – 04/2016

6.3 Requirements

The following conditions apply to the startup:

- The MOVIMOT® drive must be installed correctly both mechanically and electrically.
- Appropriate safety measures prevent the drives from starting up unintentionally.
- Appropriate safety measures must be taken to prevent risk of injury or damage to the machine.

6.4 Description of the control elements

6.4.1 Setpoint potentiometer f1

NOTICE

Loss of warranted degree of protection if the screw plugs of the f1 setpoint potentiometer or the X50 diagnostic interface are installed incorrectly or not at all.

Damage to the MOVIMOT® inverter.

- After setting the setpoint, make sure the screw plug of the setpoint potentiometer has a seal and screw it in.

Use the f1 potentiometer to adjust setpoint f1.

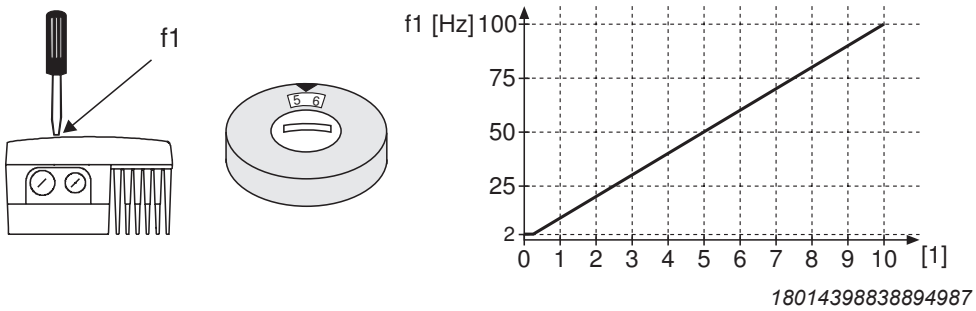

[1] Potentiometer setting

Setpoint f1 is active when the AS-Interface bit DO2 "speed f2/sped f1" = "0".

22167811/EN – 04/2016

6.4.2 Switch f2

Use the f2 switch to adjust setpoint f2.

Switch f2											
Detent position	**0**	1	2	3	4	5	6	7	8	9	10
Setpoint f2 [Hz]	**5**	7	10	15	20	25	35	50	60	70	100
Minimum frequency [Hz]	**2**	5	7	10	12	15	20	25	30	35	40

Setpoint f2 is active when the AS-Interface bit DO2 "speed f2/speed f1" = "1".

6.4.3 Switch t1

Use switch t1 to set the acceleration of the MOVIMOT® drive. The ramp times are based on a setpoint step change of 1500 min^{-1} (50 Hz).

Switch t1											
Detent setting	0	1	2	3	4	**5**	6	7	8	9	10
Ramp time t1 [s]	0.1	0.2	0.3	0.5	0.7	**1**	2	3	5	7	10

22167811/EN – 04/2016

6.4.4 DIP switches S1 and S2

NOTICE

Damage to the DIP switches caused by unsuitable tools.

Damage to the DIP switches.

- To set the DIP switches, use only suitable tools, such as a slotted screwdriver with a blade width of no more than 3 mm.
- The force used for setting the DIP switches must not exceed 5 N.

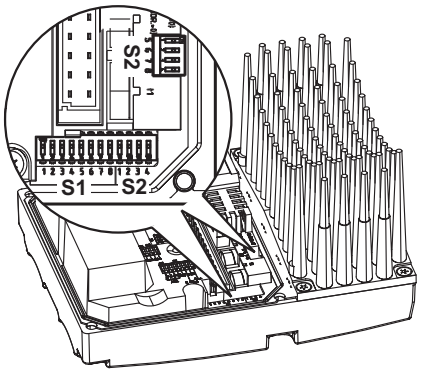

9007199881389579

DIP switch S1:

S1	1	2	3	4	5	6	7	8
Meaning	**Binary coding RS485 unit address**				**Motor protection**	**Motor performance level**	**PWM frequency**	**No load damping**
	2^0	2^1	2^2	2^3				
ON	**1**	1	1	1	Off	Motor one stage smaller	Variable (16, 8, 4 kHz)	On
OFF	0	**0**	**0**	**0**	**On**	**Motor adjusted**	**4 kHz**	**Off**

DIP switch S2:

S2	1	2	3	4		5	6	7	8
Meaning	**Brake type**	**Brake released without enable**	**Operating mode**	**Speed monitoring**		**Binary encoding additional functions**			
						2^0	2^1	2^2	2^3
ON	Optional brake	On	V/f	On		1	1	1	1
OFF	**Standard brake**	**Off**	**VFC**	**Off**		**0**	**0**	**0**	**0**

22167811/EN – 04/2016

6.5 Description of the DIP switches S1

6.5.1 DIP switches S1/1 – S1/4

RS485 address of the MOVIMOT® inverter

Set the DIP switches S1/1 - S1/4 as follows for MOVIMOT® with AS-Interface option MLK3.A:

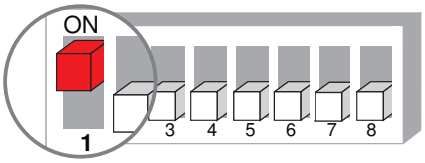

9007199592524939

6.5.2 DIP switch S1/5

Motor protection switched on / switched off

If the MOVIMOT® inverter is installed (close) to the motor, the motor protection must be deactivated.

To ensure motor protection, a TH (bimetallic thermostat) must be installed. The TH opens the sensor circuit if the rated response temperature is reached.

SEW-EURODRIVE recommends to wire the TH via input DI2.

- Input DI2 must be monitored by an external controller.
- As soon as input DI2 = "0", the external controller must switch off the drive (bit DO0 and DO1 = "0").

When mounted close to the motor, input DI2 is no longer available for connecting external sensors.

6.5.3 DIP switch S1/6

Lower motor power rating

- When activated, the DIP switch S1/6 allows the MOVIMOT® inverter to be assigned to a motor with a lower motor power rating. The rated unit power is not affected.
- When using a motor with a lower power rating, the MOVIMOT® inverter is a power level higher from the motor's perspective. The overload capacity of the drive may be increased as a result. A higher current can be provided briefly, leading to higher torque ratings.
- The aim of the DIP switch S1/6 is to achieve short-term utilization of the motor's peak torque. The unit's current limit remains the same regardless of the switch setting. The motor protection function is adjusted depending on the switch setting.
- Stall protection for the motor is not possible in this operating mode (S1/6 = "ON").
- The necessary setting for the DIP switch S1/6 depends on the motor type and therefore also on the drive ID module in the MOVIMOT® inverter.

  First check the drive ID module type in the MOVIMOT® inverter. Set the DIP switch S1/6 according to the following table.

22167811/EN – 04/2016

Motor with operating point 400 V/50 Hz

Applies to MOVIMOT® with the following drive ID modules:

Drive ID module			Motor	
Identification	ID color	Part number	Line voltage [V]	Line frequency [Hz]
DRS/400/50	White	18214371	230/400	50
DRE/400/50	Orange	18214398	230/400	50
DRP/230/400	Brown	18217907	230/400	50
DRN/400/50	Light blue	28222040	230/400	50

Setting DIP switch S1/6:

Power	Motor type	MOVIMOT® MM..D-503-00 inverter			
		Motor in ⅄ connection		Motor in △ connection	
[kW]		S1/6 = OFF	S1/6 = ON	S1/6 = OFF	S1/6 = ON
0.25	DR63L4/.. DR**E**80S4/..	–	MM**03**D..	MM**03**D..	MM**05**D..
0.37	DR**S**71S4/.. DR**E**80S4/..	MM**03**D..	MM**05**D..	MM**05**D..	MM**07**D..
0.55	DR**S**71M4/.. DR**E**80M4/..	MM**05**D..	MM**07**D..	MM**07**D..	MM**11**D..
0.75	DR**S**80S4/.. DR**E**80M4/.. DR**P**90M4/.. DR**N**80M4/..	MM**07**D..	MM**11**D..	MM**11**D..	MM**15**D..
1.1	DR**S**80M4/.. DR**E**90M4/.. DR**P**90L4/.. DR**N**90S4/..	MM**11**D..	MM**15**D..	MM**15**D..	MM**22**D..
1.5	DR**S**90M4/.. DR**E**90L4/.. DR**P**100M4/.. DR**N**90L4/..	MM**15**D..	MM**22**D..	MM**22**D..	MM**30**D..
2.2	DR**S**90L4/.. DR**E**100M4/.. DR**P**100L4/.. DR**N**100LS4/..	MM**22**D..	MM**30**D..	MM**30**D..	MM**40**D..
3.0	DR**S**100M4/.. DR**E**100LC4/.. DR**P**112M4/.. DR**N**100L4/..	MM**30**D..	MM**40**D..	MM**40**D..	–
4.0	DR**S**100LC4/.. DR**E**132S4/.. DR**N**112M4/..	MM**40**D..	–	–	–

22167811/EN – 04/2016

Motor with operating point 460 V/60 Hz

Applies to MOVIMOT® with the following drive ID modules:

Drive ID module			Motor	
Marking	ID color	Part number	Line voltage [V]	Line frequency [Hz]
DRS/460/60	Yellow	18214401	266/460	60
DRE/460/60	Green	18214428	266/460	60
DRP/266/460	Beige	18217915	266/460	60
DRN/460/60	Pale green	28222059	266/460	60

Setting DIP switch S1/6:

Power	Motor type	MOVIMOT® MM..D-503-00 inverter			
		Motor in ⅄ connection		Motor in △ connection	
[kW]		S1/6 = OFF	S1/6 = ON	S1/6 = OFF	S1/6 = ON
0.37	DR**S**71S4/..	MM**03**D..	MM**05**D..	MM**05**D..	MM**07**D..
0.55	DR**S**71M4/..	MM**05**D..	MM**07**D..	MM**07**D..	MM**11**D..
0.75	DR**S**80S4/.. DR**E**80M4/.. DR**P**90M4/.. DR**N**80M4/..	MM**07**D..	MM**11**D..	MM**11**D..	MM**15**D..
1.1	DR**S**80M4/.. DR**E**90M4/.. DR**P**90L4/.. DR**N**90S4/..	MM**11**D..	MM**15**D..	MM**15**D..	MM**22**D..
1.5	DR**S**90M4/.. DR**E**90L4/.. DR**P**90L4/.. DR**N**90L4/..	MM**15**D..	MM**22**D..	MM**22**D..	MM**30**D..
2.2	DR**S**90L4/.. DR**E**100L4/.. DR**P**112M4/.. DR**N**100L4/..	MM**22**D..	MM**30**D..	MM**30**D..	MM**40**D..
3.7	DR**S**100M4/.. DR**E**100LC4/.. DR**P**132S4/.. DR**N**100L4/..	MM**30**D..	MM**40**D..	–	–
4.0	DR**S**100LC4/.. DR**E**132S4/.. DR**N**112M4/..	MM**40**D..	–	–	–

22167811/EN – 04/2016

Motor with 50/60 Hz voltage range

Applies to MOVIMOT® with the following drive ID modules:

Drive ID module			Motor	
Marking	ID color	Part number	Line voltage [V]	Line frequency [Hz]
DRS/DRE/50/60	Violet	18214444	220 – 240/380 – 415 254 – 277/440 – 480	50 60
DRS/DRN/50/60	Pastel green	28222067	220 – 230 / 380 – 400 266/460	50 60

Setting DIP switch S1/6:

Power	Motor type	MOVIMOT® MM..D-503-00 inverter			
		Motor in ⅄ connection		Motor in △ connection	
[kW]		S1/6 = OFF	S1/6 = ON	S1/6 = OFF	S1/6 = ON
0.25	DR63L4/..	–	MM**03**D..	MM**03**D..	MM**05**D..
0.37	DR**S**71S4/..	MM**03**D..	MM**05**D..	MM**05**D..	MM**07**D..
0.55	DR**S**71M4/..	MM**05**D..	MM**07**D..	MM**07**D..	MM**11**D..
0.75	DR**E**80M4/.. DR**N**80M4/..	MM**07**D..	MM**11**D..	MM**11**D..	MM**15**D..
1.1	DR**E**90M4/.. DR**N**90S4/..	MM**11**D..	MM**15**D..	MM**15**D..	MM**22**D..
1.5	DR**E**90L4/.. DR**N**90L4/..	MM**15**D..	MM**22**D..	MM**22**D..	MM**30**D..
2.2	DR**E**100L4/.. DR**N**100L4/..	MM**22**D..	MM**30**D..	MM**30**D..	MM**40**D..
3.0	DR**E**100LC4/.. DR**N**100L4/..	MM**30**D..	MM**40**D..	MM**40**D..	–
4.0	DR**E**132S4/.. DR**N**112M4/..	MM**40**D..	–	–	–

Motor with operating point 380 V/60 Hz (ABNT regulation for Brazil)

Applies to MOVIMOT® with the following drive ID modules:

Drive ID module			Motor	
Identification	ID color	Part number	Line voltage [V]	Line frequency [Hz]
DRS/DRE/380/60	Red	18234933	220/380	60

Setting DIP switch S1/6:

Power	Motor type	MOVIMOT® MM..D-503-00 inverter			
		Motor in ⅄ connection		Motor in △ connection	
[kW]		S1/6 = OFF	S1/6 = ON	S1/6 = OFF	S1/6 = ON
0.37	DR**S**71S4/..	MM**03**D..	MM**05**D..	MM**05**D..	MM**07**D..
0.55	DR**S**71M4/..	MM**05**D..	MM**07**D..	MM**07**D..	MM**11**D..
0.75	DR**E**80S4/..	MM**07**D..	MM**11**D..	MM**11**D..	MM**15**D..
1.1	DR**E**80M4/..	MM**11**D..	MM**15**D..	MM**15**D..	MM**22**D..
1.5	DR**E**90M4/..	MM**15**D..	MM**22**D..	MM**22**D..	MM**30**D..
2.2	DR**E**90L4/..	MM**22**D..	MM**30**D..	MM**30**D..	MM**40**D..
3.0	DR**E**100M4/..	MM**30**D..	MM**40**D..	MM**40**D..	–
4.0	DR**E**100L4/..	MM**40**D..	–	–	–

22167811/EN – 04/2016

Motor with operating point 400 V/50 Hz and LSPM technology

Applies to MOVIMOT® with the following drive ID module:

Drive ID module			Motor	
Identification	ID color	Part number	Supply system voltage [V]	Line frequency [Hz]
DRU...J/400/50	Gray	28203194	230/400	50

Setting DIP switch S1/6:

Power rating [kW]	Motor type	MOVIMOT® MM..D-503-00 inverter			
		Motor in ⅄ connection		Motor in △ connection	
		S1/6 = OFF	S1/6 = ON	S1/6 = OFF	S1/6 = ON
0.25	DR**U**71SJ/..	–	MM**03**D..	MM**03**D..	MM**05**D..
0.37	DR**U**71MJ4/..	MM**03**D..	MM**05**D..	MM**05**D..	MM**07**D..
0.55	DR**U**80SJ4/..	MM**05**D..	MM**07**D..	MM**07**D..	MM**11**D..
0.75	DR**U**80MJ4/..	MM**07**D..	MM**11**D..	MM**11**D..	MM**15**D..
1.1	DR**U**90MJ4/..	MM**11**D..	MM**15**D..	MM**15**D..	MM**22**D..
1.5	DR**U**90LJ4/..	MM**15**D..	MM**22**D..	MM**22**D..	MM**30**D..
2.2	DR**U**100MJ4/..	MM**22**D..	MM**30**D..	MM**30**D..	MM**40**D..
3.0	DR**U**100LJ4/..	MM**30**D..	MM**40**D..	MM**40**D..	–

6.5.4 DIP switch S1/7

Setting the maximum PWM frequency

- When DIP switch S1/7 is set to "OFF", the MOVIMOT® works with the PWM frequency of 4 kHz.
- When DIP switch S1/7 is set to "ON", the MOVIMOT® works with the PWM frequency of 16 kHz (low-noise). MOVIMOT® incrementally switches back to lower clock frequencies depending on the heat sink temperature and the load on the inverter.

6.5.5 DIP switch S1/8

No-load vibration damping

When setting DIP switch S1/8 to "ON", this function reduces resonance vibrations when in no-load operation.

22167811/EN – 04/2016

6.6 Description of the DIP switches S2

6.6.1 DIP switch S2/1

Brake type

- When using the standard brake, the DIP switch S2/1 must be set to "OFF".
- When using the optional brake, the DIP switch S2/1 must be set to "ON".

Motor				Standard brake [type]	Optional brake [type]
400 V/50 Hz 460 V/60 Hz 50/60 Hz voltage range		380 V/60 Hz ABNT Brazil	400 V/50 Hz LSPM Technology	S2/1 = OFF	S2/1 = ON
DR.63L4				BR03	–
DRS71S4 DRE80S4		DRS71S4	DRU71MJ4	BE05	BE1
DRS71M4 DRS80S4 DRE80M4	DRN80M4	DRS71M4 DRE80S4	DRU80SJ4 DRU80MJ4	BE1	BE05
DRP90M4				BE1	BE2
DRS80M4 DRE90M4 DRP90L4	DRN90S4	DRE80M4	DRU90MJ4	BE2	BE1
DRS90M4 DRE90L4	DRN90L4	DRE90M4		BE2	BE1
DRP100M4			DRU90LJ4	BE2	BE5
DRS90L4 DRE100M4 DRE100L4 DRP100L4	DRN100LS4	DRE90L4	DRU100MJ4	BE5	BE2
DRS100M4 DRS100L4 DRS100LC4 DRE100LC4	DRN100L4	DRE100M4 DRE100L4	DRU100LJ4	BE5	BE2
DRP112M4 DRE132S4 DRP112S4	DRN112M4			BE5	BE11

Preferred brake voltage

MOVIMOT® type (inverter)		Preferred Brake voltage
MOVIMOT® MM..D-503, size 1	(MM03.. – MM15..)	230 V
MOVIMOT® MM..D-503, size 2	(MM22.. – MM40..)	120 V
MOVIMOT® MM..D-233, sizes 1 and 2	(MM03.. – MM40..)	

6.6.2 DIP switch S2/2

Brake release without enable

When switch S2/2 is set to "ON", it is possible to release the brake even if there is no drive enable.

This function is only available for brakemotors.

This function is not available in hoist operation.

22167811/EN – 04/2016

Functional description

The function described is only available for the following designs:

- MOVIMOT® with MLK30A
- MOVIMOT® with MLK31A and function module 1, 4, 5 or 7[1)]
- MOVIMOT® with MLK32A and function module 1, 4, 5 or 7[1)]

The brake can be released by setting the AS-Interface bit DO2 "speed f2/speed f1". The following conditions must be met:

Status of AS-Interface bits				Enable status	Error status	Brake function
DO0 (R)	DO1 (L)	DO2 (f2/f1)	DO3 (reset/ enable			
"1" "0"	"0" "1"	"0"	"1"	Unit enabled	No unit error	The brake is controlled by the MOVIMOT® inverter, setpoint f1
"1" "0"	"0" "1"	"1"	"1"	Unit enabled	No unit error	The brake is controlled by the MOVIMOT® inverter, setpoint f2
"1" "0"	"1" "0"	"0"	"1"	Unit not enabled	No unit error	Brake applied
"1"	"1"	"1"	"1"	Unit not enabled	No unit error	Brake applied
"0"	"0"	**"1"**	**"1"**	**Unit not enabled**	**No unit error**	**Brake released for manual movement**
All states possible				Unit not enabled	Device fault	Brake applied

In order to be able to release the brake without the drive being enabled, the AS-Interface bit DO3 "Reset/controller enable" must be set.

1) For further information on function of the AS-Interface bit DO02, refer to the description of the function module, see chapter "Function module" in the operating instructions.

Setpoint selection

Setpoints are selected depending on the AS-Interface bit DO2 "speed f2/speed f1":

Enable status	AS-Interface bit	Active setpoint
Unit enabled	DO2 = "0"	Setpoint potentiometer f1 active
Unit enabled	DO2 = "1"	Setpoint potentiometer f2 active

Behavior if unit not ready

If a unit is not ready for operation, the brake is always applied, regardless of the position of the AS-Interface bit DO2 "speed f2/speed f1".

LED display

The MOVIMOT® status LED flashes quickly (t_{on} : t_{off} = 100 ms : 300 ms) if the brake has been released for manual movement.

22167811/EN – 04/2016

6.6.3 DIP switch S2/3

Operating mode

- DIP switch S2/3 = "OFF": VFC operation for 4-pole motors
- DIP switch S2/3 = "ON": V/f operation reserved for special cases

6.6.4 DIP switch S2/4

Speed monitoring

Speed monitoring (S2/4 = "ON") protects the drive when it is blocked.

If the drive is operated at the current limit for longer than 1 second when speed monitoring is active (S2/4 = "ON"), the MOVIMOT® inverter trips the speed monitoring fault. The status LED of the MOVIMOT® inverter signals the error by slowly flashing red (error code 08). This error only occurs when the current limit has been reached for the duration of the deceleration time.

6.6.5 DIP switches S2/5 – S2/8

Additional functions

The binary coding of the DIP switches S2/5 – S2/8 allows for the activation of additional functions. Proceed as follows to activate possible additional functions:

Decimal value	0	1	2	3	4	5	6	7	8	9	10	11	12	13	14	15
S2/5	–	X	–	X	–	X	–	X	–	X	–	X	–	X	–	X
S2/6	–	–	X	X	–	–	X	X	–	–	X	X	–	–	X	X
S2/7	–	–	–	–	X	X	X	X	–	–	–	–	X	X	X	X
S2/8	–	–	–	–	–	–	–	–	X	X	X	X	X	X	X	X

X = ON – = OFF

22167811/EN – 04/2016

6.7 Selectable additional functions of MM..D-503-00

6.7.1 Overview of the available additional functions

Decimal value	Brief description	Restrictions	See page
0	Basic functions, no additional function selected	–	–
1	MOVIMOT® with increased ramp times	–	(→ 🗎 79)
2	MOVIMOT® with adjustable current limiting (Fault if exceeded)	–	(→ 🗎 79)
3	MOVIMOT® with adjustable current limiting (can be switched via AS-Interface bit DO2)	–	(→ 🗎 80)
4	**Not possible for MOVIMOT® with integrated AS-Interface**		–
5	**Not possible for MOVIMOT® with integrated AS-Interface**		–
6	MOVIMOT® with maximum 8 kHz PWM frequency	–	(→ 🗎 82)
7	MOVIMOT® with rapid start/stop	–	(→ 🗎 82)
8	MOVIMOT ® with minimum frequency 0 Hz	–	(→ 🗎 83)
9	MOVIMOT® for lifting applications	–	(→ 🗎 84)
10	MOVIMOT® with minimum frequency 0 Hz and reduced torque at low frequencies	–	(→ 🗎 86)
11	Monitoring of line phase failure deactivated	–	(→ 🗎 87)
12	**Not possible for MOVIMOT® with integrated AS-Interface**		–
13	MOVIMOT® with extended speed monitoring	–	(→ 🗎 87)
14	MOVIMOT® with deactivated slip compensation	–	(→ 🗎 91)
15	Not connected	–	–

22167811/EN – 04/2016

6.7.2 Additional function 1

MOVIMOT® with increased ramp times

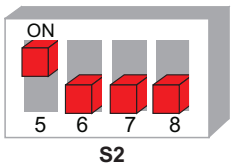

329690891

Functional description

- It is possible to set ramp times of up to 40 s.

Changed ramp times

Switch t1											
Detent position	0	1	2	3	4	5	6	7	8	9	10
Ramp time t1 [s]	0.1	0.2	0.3	0.5	0.7	1	20	25	30	35	40

☐ = corresponds to standard setting ☐ = changed ramp times

6.7.3 Additional function 2

MOVIMOT® with adjustable current limitation (error if exceeded)

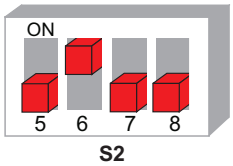

329877131

Functional description

- The current limit can be set using switch f2.
- Setpoint f2 and the minimum frequency are set to the following values:
  - Setpoint f2: 5 Hz
  - Minimum frequency: 2 Hz
- The monitoring function comes into effect above 15 Hz. If the drive operates at the current limit for longer than 500 ms, the unit generates an error (error 44). This is indicated by the status LED flashing red quickly.

Adjustable current limits

Switch f2											
Detent position	0	1	2	3	4	5	6	7	8	9	10
I_{max} [%] of I_N	90	95	100	105	110	115	120	130	140	150	160

22167811/EN – 04/2016

6.7.4 Additional function 3

MOVIMOT® with adjustable current limiting
(switchable via AS-Interface bit DO2 "speed f2/speed f1")
reduction of the frequency when exceeded

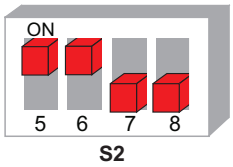

Functional description

The function described is only available for the following designs:

- MOVIMOT® with MLK30A
- MOVIMOT® with MLK31A and function module 7[1)]
- MOVIMOT® with MLK32A and function module 7[1)]

The current limiting can be set using switch f2. The AS-Interface bit DO2 "speed f2/ speed f1" can be used to switch between the maximum current limit and the current limit set with switch f2.

1) For further information on function of the AS-Interface bit DO02, refer to the description of the function module, see chapter "Function module".

Response upon reaching the current limit

- If the current limit is reached, the unit reduces the frequency via the current limitation function. If necessary, the ramp is stopped to prevent the current from increasing.
- If the unit is operating at the current limit, the status LED indicates this status by flashing green quickly.

System internal values for setpoint f2 / minimum frequency

- It is no longer possible to switch between setpoint f2 and setpoint f1 via the AS-Interface bit DO2 "speed f2/speed f1", or to adjust the minimum frequency.
- The minimum frequency is set to 2 Hz.

Adjustable current limits

Adjust the current limits via switch f2 according to the following table:

Switch f2											
Detent position	0	1	2	3	4	5	6	7	8	9	10
I_{max} [%] of I_N	60	70	80	90	100	110	120	130	140	150	160

Selection of the current limits via AS-Interface bit DO2 "speed f2/speed f1"

Select the current limits via the AS-Interface bit DO2:

AS-Interface bit DO2 = "0"	**AS-Interface bit DO2 = "1"**
Default current limiting	Current limiting via switch f2

22167811/EN – 04/2016

Influencing the current characteristic curve

The current limit curve is calculated with a constant factor by selecting a lower current limit.

Motor with star connection

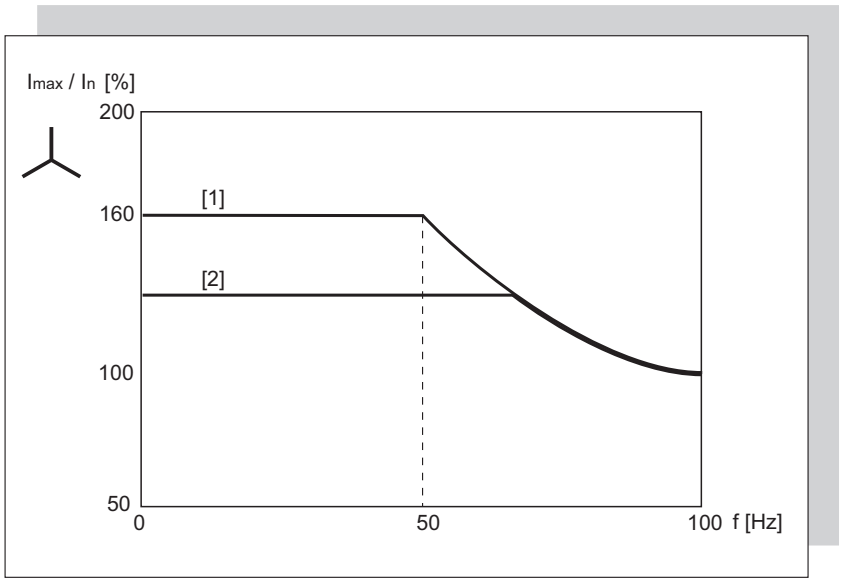

[1] Current limit characteristic curve of standard function
[2] Reduced current limit curve for additional function 3 and AS-Interface bit DO2 "speed f2/speed f1" = "1"

Motor with delta connection

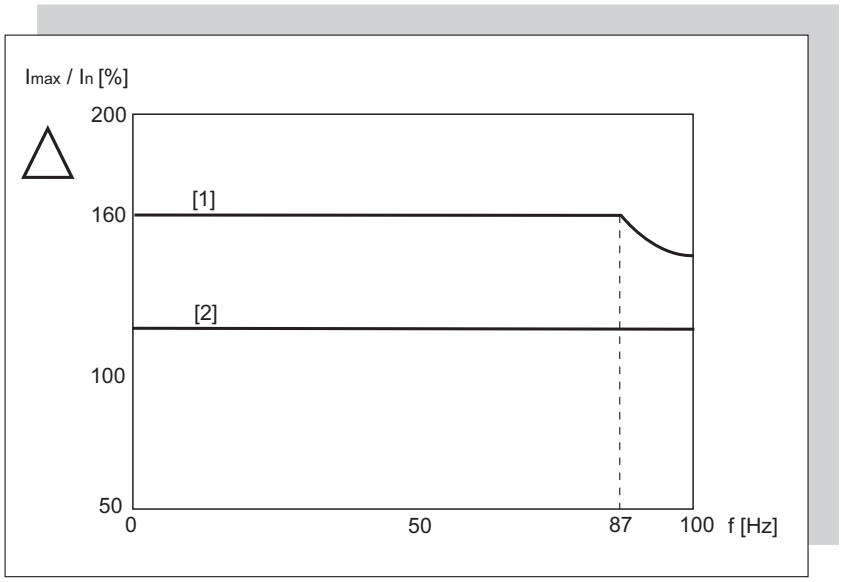

[1] Current limit characteristic curve of standard function
[2] Reduced current limit curve for additional function 3 and AS-Interface bit DO2 "speed f2/speed f1" = "1"

22167811/EN – 04/2016

6.7.5 Additional function 6

MOVIMOT® with maximum 8 kHz PWM frequency

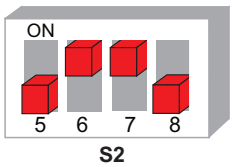

330028171

Functional description

- This additional function reduces the maximum PWM frequency from 16 kHz to 8 kHz. Adjust the PWM frequency via the DIP switch S1/7
- If DIP switch S1/7 is set to "ON", the unit operates with an 8 kHz PWM frequency and switches back to 4 kHz depending on the heat sink temperature.

	S1/7 without additional function 6	S1/7 with additional function 6
ON	PWM frequency variable 16, 8, 4 kHz	PWM frequency variable 8, 4 kHz
OFF	PWM frequency 4 kHz	PWM frequency 4 kHz

6.7.6 Additional function 7

MOVIMOT® with rapid start/stop

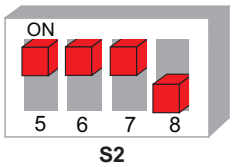

330064651

Functional description

- The pre-magnetization time is set to 0 s.
- Pre-magnetization is not performed after the drive is enabled. This is necessary to start acceleration along the setpoint ramp as quickly as possible.
- If a brake is connected to terminals X1:13, X1:14, X1:15, the brake in controlled by MOVIMOT®.
- If a brake resistor is connected to terminals X1:13, X1:15, the SEW brake is controlled via output X10 and option BEM.

  The relay is assigned the "Brake released" function.

22167811/EN – 04/2016

Control via AS-Interface

The rapid stop function (applying the brake and inhibiting the output stage) can be realized via the AS-Interface bit DO3 "reset/controller enable" when controlling via AS-Interface.

- If the AS-Interface bit DO3 "reset/controller enable" is reset to "0" during enable or a downward ramp, MOVIMOT® applies the brake and inhibits the output stage.
- If the motor frequency is lower than the stop frequency, MOVIMOT® applies the brake irrespective of the AS-Interface bit DO3 "reset/controller enable".
- After activation of the rapid stop, the enable must only be granted again once the drive has reached a standstill.

6.7.7 Additional function 8

MOVIMOT® with minimum frequency 0 Hz

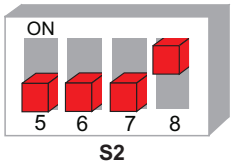

330101899

Functional description

The function described is only available for the following designs:

- MOVIMOT® with MLK30A
- MOVIMOT® with MLK31A and function module 7[1)]
- MOVIMOT® with MLK32A and function module 7[1)]

In detent position 0 of switch f2, the setpoint f2 with the activated additional function is 0 Hz. All other values that can be set remain unchanged.

Switch f2											
Detent setting	**0**	1	2	3	4	5	6	7	8	9	10
Minimum frequency [Hz] **With active additional function**	**0**	5	7	10	12	15	20	25	30	35	40
Minimum frequency [Hz] **without additional function**	**2**	5	7	10	12	15	20	25	30	35	40

1) For further information on function of the AS-Interface bit DO02, refer to the description of the function module, see chapter "Function module".

22167811/EN – 04/2016

6.7.8 Additional function 9

MOVIMOT® for lifting applications

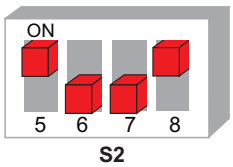

330140427

⚠ WARNING

Danger of fatal injury if the hoist falls.

Severe or fatal injuries.

- The MOVIMOT® drive may not be used as a safety device in lifting applications.
- Use monitoring systems or mechanical protection devices to ensure safety.

NOTICE

System overload due to operation of the MOVIMOT® drive at the current limit.

Damage to the inverter.

- Activate speed monitoring. If the MOVIMOT® drive is operated at the current limit for longer than 1 s, it will trigger the error message F08 "speed monitoring".

Requirements

The MOVIMOT® can only be used in lifting applications if the following prerequisites are met:

- It is mandatory to use a brake controller in connection with an external braking resistor.
- Activate the ""speed monitoring" function" (→ 🗎 77) (DIP switch S2/4 = "ON").
- Additional function 9 is only possible in conjunction with brake motors.
- Make sure that the DIP switch S2/3 is set to "OFF" (VFC operation).
- It is mandatory to use a brake controller in connection with an external braking resistor.
- Activate the "speed monitoring" function (DIP switch S2/4 = "ON").

22167811/EN – 04/2016

Functional description

The function described is only available for the following designs:

- MOVIMOT® with MLK30A
- MOVIMOT® with MLK31A and function module 7[1)]
- MOVIMOT® with MLK32A and function module 7[1)]

The start frequency is 2 Hz. If the function is not activated, the start frequency is 0.5 Hz.

The brake release time is set to 200 ms (standard = 0 ms). This setting prevents the motor from working against the brake.

The brake application time (post-magnetization time) is fixed to 200 ms. This setting ensures that the brake is applied as soon as the motor stops generating torque.

If a braking resistor is connected to terminals X1:13, X1:15, the brake by SEW-EURODRIVE is controlled via output X10 and option BEM.

Overview of brake control with additional function 9:

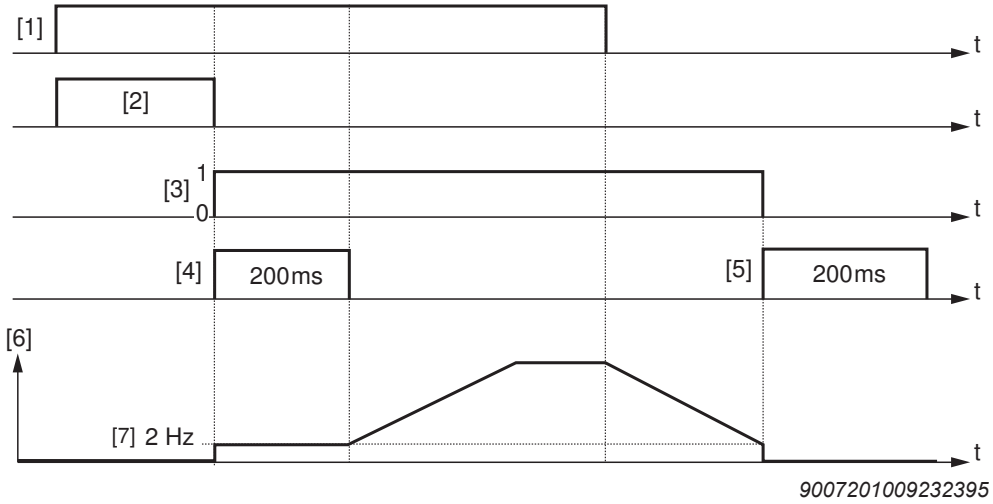

[1] Enable
[2] Premagnetization time
[3] Brake control signal
"1" = released, "0" = applied
[4] Brake release time
[5] Brake application time (post-magnetization time)
[6] Frequency
[7] Stop frequency = start/minimum frequency

- A braking resistor (BW..) must be connected to terminals X1:13 and X1:15 of MOVIMOT®. Terminal X1:14 is not assigned.

INFORMATION

The function "Brake release without enable" is not available in lifting operation.

1) For further information on function of the AS-Interface bit DO02, refer to the description of the function module, see chapter "Function module".

22167811/EN – 04/2016

Control via AS-Interface

The rapid stop function (applying the brake and inhibiting the output stage) can be realized via the AS-Interface bit DO3 "reset/controller enable" when controlling via AS-Interface.

- If the AS-Interface bit DO3 "reset/controller enable" is reset to "0" during enable or a downward ramp, MOVIMOT® applies the brake and inhibits the output stage.
- If the motor frequency is lower than the stop frequency, MOVIMOT® applies the brake irrespective of the AS-Interface bit DO3 "reset/controller enable".
- After activation of the rapid stop, the enable must only be granted again once the drive has reached a standstill.

6.7.9 Additional function 10

MOVIMOT® with reduced torque at low frequencies

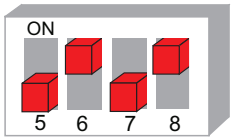

Functional description

- By reducing the slip compensation and active current at low speeds, the drive only develops a reduced torque (see the following figure):
- Minimum frequency = 0 Hz, see "additional function 8" (→ 🗎 83).

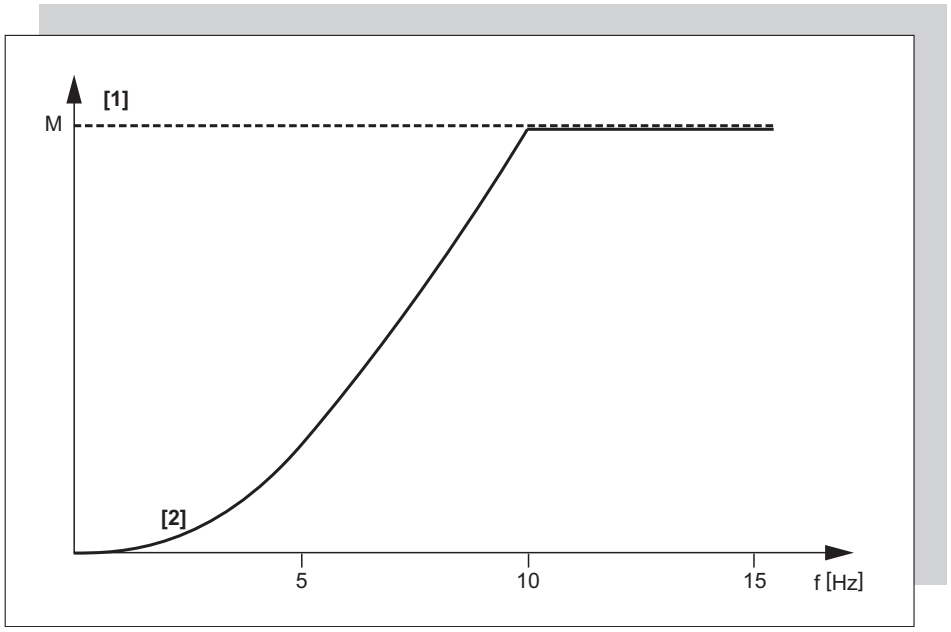

334866315

[1] Maximum torque in VFC mode
[2] Maximum torque when additional function 10 is activated

22167811/EN – 04/2016

6.7.10 Additional function 11

Deactivating the line phase failure monitoring

NOTICE

Deactivating the line phase failure monitoring can damage the unit if conditions are unfavorable.

Inverter damage.

- Deactivate the line phase failure check only with short-term asymmetries of the mains voltage.
- Make sure that the MOVIMOT® drive is always supplied with all 3 phases of the mains voltage.

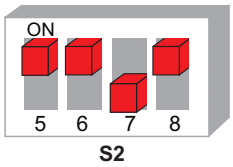

330218763

Functional description

- When the additional function is activated, the phases are not monitored.
- It is a good idea to deactivate this function for power supplies with short-term asymmetries, for example.

6.7.11 Additional function 13

MOVIMOT® with extended speed monitoring

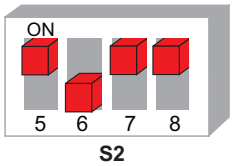

330300683

⚠ WARNING

Risk of fatal injury if the hoist falls.

Severe or fatal injuries.

- The MOVIMOT® drive may not be used as a safety device in hoist applications.
- Use monitoring systems or mechanical protection devices to ensure safety.

22167811/EN – 04/2016

Requirements

The MOVIMOT® can only be used in lifting applications if the following prerequisites are met:

- Additional function 13 is only possible in conjunction with brake motors.
- Make sure that the DIP switch S2/3 is set to "OFF" (VFC operation).
- It is mandatory to use a brake control in connection with an external braking resistor.

Functional description

The function described is only available for the following designs:

- MOVIMOT® with MLK30A
- MOVIMOT® with MLK31A and function module 7[1)]
- MOVIMOT® with MLK32A and function module 7[1)]

Additional function 13 includes the following functions:

- Additional function 9, MOVIMOT® for lifting applications
- Speed monitoring with adjustable monitoring time

Once the additional function 13 is activated, speed monitoring is always on, regardless of the setting of DIP switch S2/4.

Once the additional function 13 has been activated, the DIP switch S2/4 has the following functionality:

- S2/4 = "OFF"
  - The speed monitoring time 2 is set at switch t1.
  - The speed monitoring times 1 and 3 are fixed to 1 s.
  - Setpoint f2 is set as switch f2.
  - The ramp time is fixed to 1 s.
  - The minimum frequency is fixed at 2 Hz.
- S2/4 = "ON"
  - The speed monitoring time 2 is set at switch f2.
  - The speed monitoring times 1 and 3 are fixed to 1 s.
  - The setpoint f2 is fixed at 5 Hz.
  - The ramp time is set at switch t1.
  - The minimum frequency is fixed at 2 Hz.

1) For further information on function of the AS-Interface bit DO02, refer to the description of the function module, see chapter "Function module".

Control via AS-Interface

- When the AS-Interface bit DO3 "reset/controller enable" is reset to "0", MOVIMOT® applies the brake and inhibits the output stage.
- If the motor frequency is lower than the stop frequency, MOVIMOT® applies the brake irrespective of the AS-Interface bit DO3 "reset/controller enable".

22167811/EN – 04/2016

Setting options of additional function 13

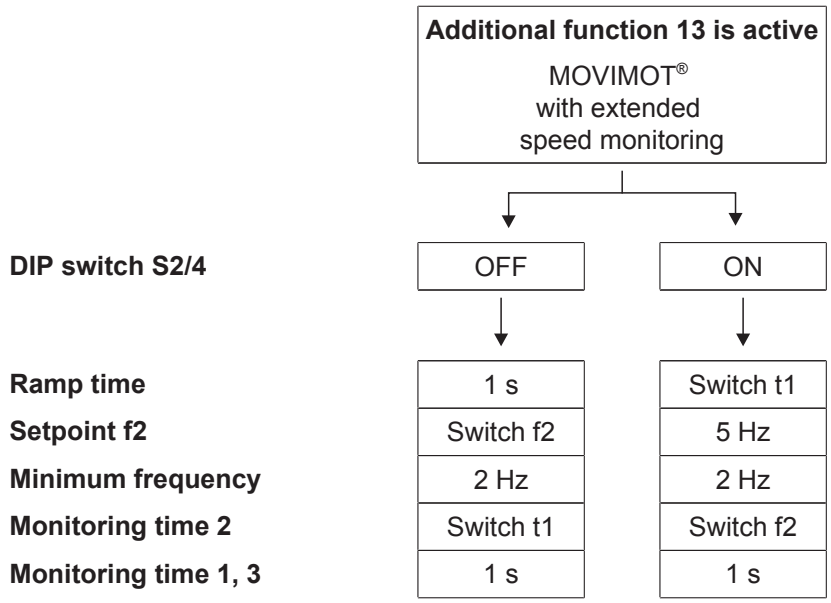

Setting the speed monitoring times

When additional function 13 is active, the following values may be set as monitoring times on switches t1 and f2:

Switch t1 or f2 (see above)											
Detent position	0	1	2	3	4	5	6	7	8	9	10
Monitoring time 2 [s]	0.1	0.2	0.3	0.4	0.5	0.6	0.7	0.8	0.9	1.0	1.5
Monitoring times 1 and 3 [s]	0.1	0.2	0.3	0.4	0.5	0.6	0.7	0.8	0.9	1.0	1.5

22167811/EN – 04/2016

Validity of the speed monitoring times

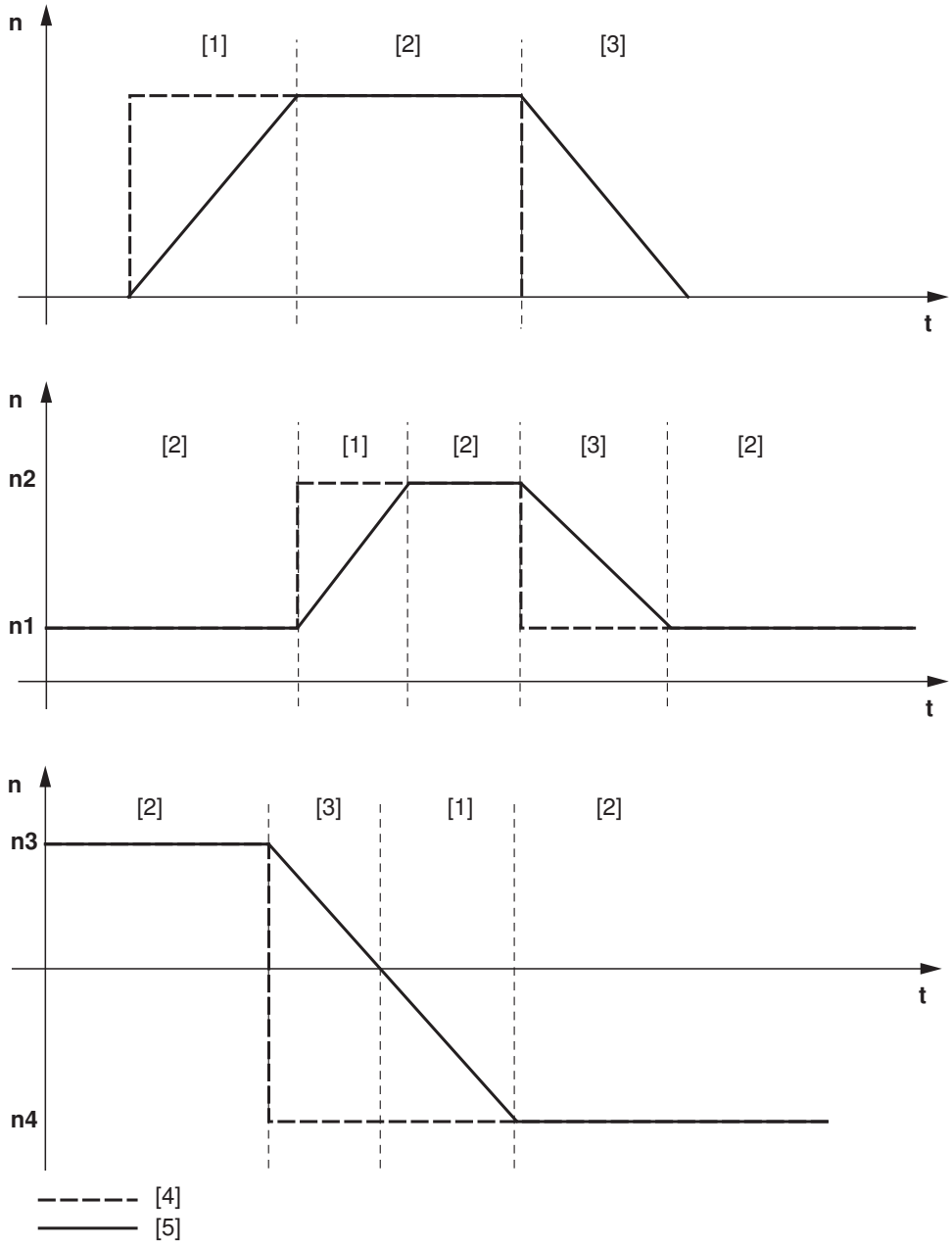

9007199591797259

[1] Validity of monitoring time 1
[2] Validity of monitoring time 2
[3] Validity of monitoring time 3
[4] Speed setpoint
[5] Speed output (actual value)

Monitoring time 1 is valid when the actual speed increases after a setpoint change.

The validity range of monitoring time 2 begins when the setpoint is reached.

The validity range of monitoring time 3 applies when the actual speed decreases after a setpoint change.

22167811/EN – 04/2016

6.7.12 Additional function 14

MOVIMOT® with deactivated slip compensation

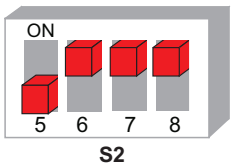

330342539

Functional description

Slip compensation is deactivated.

Deactivating slip compensation can reduce the speed accuracy of the motor.

22167811/EN – 04/2016

6.8 Startup procedure

⚠ WARNING

Electric shock from capacitors that have not been fully discharged.

Severe or fatal injuries.

- Disconnect the inverter from the power. Observe the minimum switch-off time after disconnection from the supply system:
  - **1 minute**

1. Remove the MOVIMOT® inverter from the connection box.
2. Set the required AS-Interface address:
   ⇨ With a hand-held programming device (→ 🗎 140)
   ⇨ or with a master (see description of the AS-Interface master)
3. Check the connection of the MOVIMOT® inverter.
   ⇨ See chapter "Electrical Installation".
4. Set the type of 24 V supply via the switch S5 (→ 🗎 141).
5. Set DIP switches S1/1 – S1/4 as follows.

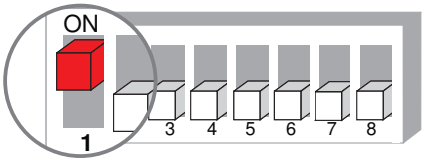

9007199592524939

6. Set the first speed at the setpoint potentiometer f1 (active when the AS-Interface bit DO2 = "0"). Factory setting: approx. 50 Hz (1500 min^{-1})

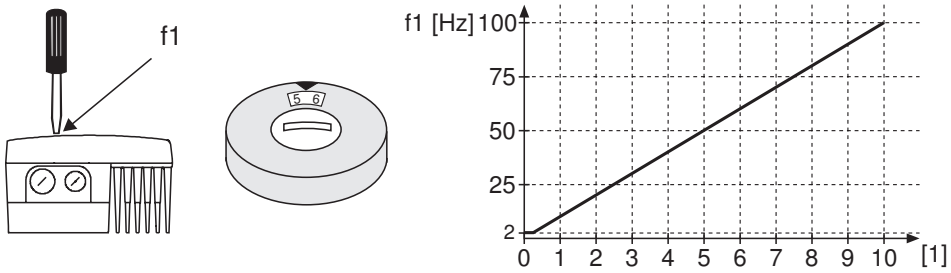

18014398838894987

[1] Potentiometer setting

7. **NOTICE!** Loss of warranted degree of protection if the screw plugs of the f1 setpoint potentiometer or the X50 diagnostic interface are installed incorrectly or not at all. Damage to the MOVIMOT® inverter.
   Make sure the screw plug of the setpoint potentiometer has a seal and screw it in.
8. Set the second speed at switch f2 (active if AS-Interface bit DO2 = "1").

Switch f2											
Detent setting	0	1	2	3	4	5	6	7	8	9	10
Setpoint f2 [Hz]	5	7	10	15	20	25	35	50	60	70	100

22167811/EN – 04/2016

INFORMATION

During operation, the first speed is infinitely variable using the setpoint potentiometer f1 which is accessible from outside.

Speeds f1 and f2 can be set independently of each other.

9. Set the ramp time at the switch t1.
   - ⇨ The ramp times are based on a setpoint step change of 1500 min^{-1} (50 Hz).

Switch t1											
Detent setting	0	1	2	3	4	5	6	7	8	9	10
Ramp time t1 [s]	0.1	0.2	0.3	0.5	0.7	1	2	3	5	7	10

10. Place the MOVIMOT® inverter onto the connection box and screw it on tightly.
11. Switch on the following voltages:
    - ⇨ AS-Interface voltage
    - ⇨ DC 24 V auxiliary voltage (only for 24 V supply via the black AUX-PWR cable)
    - ⇨ Line voltage

22167811/EN – 04/2016

6.9 Supplementary notes for installation close to the motor

When the MOVIMOT® inverter is installed close to the motor, observe the notes in the following chapters:

6.9.1 Checking the connection type of the connected motor

Make sure that the selected connection type of the MOVIMOT® inverter corresponds to that of the connected motor according to the figure below.

337879179

NOTICE: For brakemotors: Do not install brake rectifiers inside the terminal box of the motor!

6.9.2 Motor with Option /MI

Make sure a drive ID module suitable to the energy efficiency class of the motor is plugged into the MOVIMOT® inverter.

When a motor/brakemotor (without MOVIMOT® inverter) is ordered with the option /MI, the drive ID module can be found in the terminal box of the motor.

6.9.3 DIP switch

When the MOVIMOT® inverter is installed close to the motor, the DIP switch S1/5 must be changed from the factory setting to "ON":

S1	**1**	**2**	**3**	**4**	**5**	**6**	**7**	**8**
Meaning	**Binary coding RS485 unit address**				**Motor protection**	**Motor performance level**	**PWM frequency**	**No load damping**
	2^0	**2^1**	**2^2**	**2^3**				
ON	**1**	1	1	1	**Off**	Motor one stage smaller	Variable (16, 8, 4 kHz)	On
OFF	0	**0**	**0**	**0**	On	**Adjusted**	**4 kHz**	**Off**

22167811/EN – 04/2016

6.9.4 Motor protection

INFORMATION

This chapter only applies to MM../AVSK design.

The connected motor must be equipped with a TH. SEW-EURODRIVE recommends to wire the TH via input DI2, see following figure.

- Input DI2 must be monitored by an external controller.
- As soon as input DI2 = "0", the external controller must switch off the drive (bit DO0 and DO1 = "0").

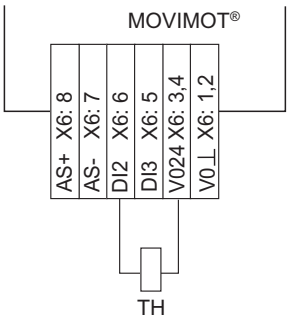

When mounted close to the motor, input DI2 is no longer available for connecting external sensors.

6.9.5 Motor protection

INFORMATION

This chapter only applies to the following designs:

- MM../AZSK
- MM../AND3/AZSK
- MM../AZZK
- MM../AND3/AZZK
- MM../AZFK

The inputs DI. are assigned to the sensor inputs. No TH can be connected to the MOVIMOT® inverter. Motor protection via TH is not possible.

The motor protection must be ensured via the thermal motor protection model of the MOVIMOT® inverter as follows:

- Start up the MOVIMOT® drive in Expert mode. See chapter "Startup of MOVIMOT® with MLK.. in Expert mode".
- Set the following parameters according to the following table:

Parameters				Required settings
No.	Index	Subindex	Designation	
340	8533	0	Motor protection	1: ON
347	10096	32	Motor cable length	Motor cable length in [m]

22167811/EN – 04/2016

6.9.6 Braking resistor

- For **motors without brake**, a braking resistor must be connected to the MOVIMOT®.

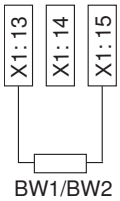

- For **brakemotors without BEM option**, no braking resistor may be connected to the MOVIMOT®.
- For **brakemotors with BEM option** and external braking resistor, the external braking resistor and the brake must be connected as follows:

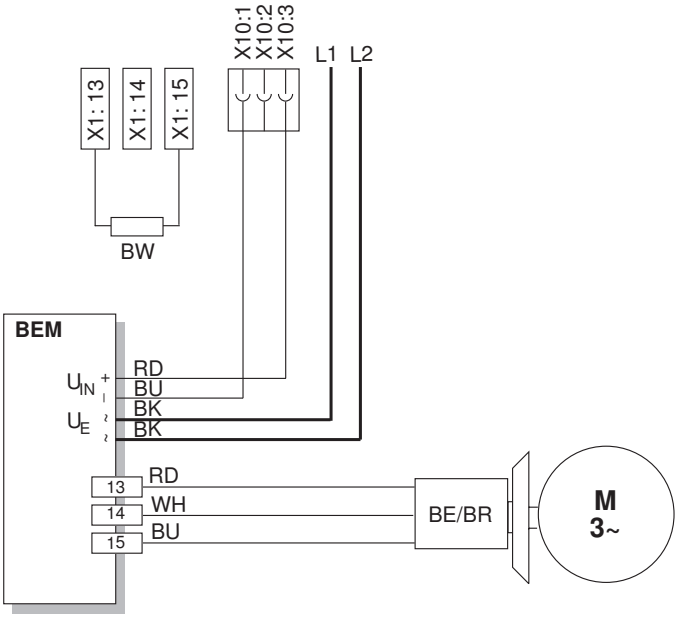

9007199895472907

22167811/EN – 04/2016

7 Startup of MOVIMOT® with MLK.. in Expert mode

INFORMATION

Startup in Expert mode is only required if you want to set parameters during startup.

Startup in Expert mode is only possible if:

- No additional function is activated (DIP switch S2/5 – S2/8 = "OFF"),
- the Drive ID module is plugged in
- and the parameter *P805 Startup mode* = "Expert".

7.1 Overview

You can select one of the following modes for starting up MOVIMOT® with AS-Interface:

Startup in Easy mode

When selecting Easy mode, you start up MOVIMOT® using DIP switches S1, S2 and switches f2, t1, quick and easy.

Observe the following chapter during startup:

- For MOVIMOT® with **MLK30A** in Easy mode:
  - Chapter "Startup of MOVIMOT® with MLK.. in Easy mode" (→ 🗎 65)

Startup in Easy mode

An extended scope of parameters is available for startup in Expert mode. You can use the MOVITOOLS® MotionStudio software or the DGB keypad to adjust the parameters to the application.

The startup in Expert mode depends on the AS-Interface option of the MOVIMOT® drive.

Observe the following chapters during startup:

- For MOVIMOT® with **MLK30A** in Expert mode:
  - Chapter "Startup of MOVIMOT® with MLK.. in Easy mode" (→ 🗎 65)
    (only description of control elements, DIP switch, additional functions)
  - Chapter "Startup of MOVIMOT® with MLK.. in Expert mode" (→ 🗎 97)
  - Chapter "Startup of MLK30A" (→ 🗎 137)
- For MOVIMOT® with **MLK31A** in Expert mode:
  - Chapter "Startup of MOVIMOT® with MLK.. in Easy mode" (→ 🗎 65)
    (only description of control elements, DIP switch, additional functions)
  - Chapter "Startup of MOVIMOT® with MLK.. in Expert mode" (→ 🗎 97)
  - Chapter "Startup of MLK31A" (→ 🗎 145)
- For MOVIMOT® with **MLK32A** in Expert mode:
  - Chapter "Startup of MOVIMOT® with MLK.. in Easy mode" (→ 🗎 65)
    (only description of control elements, DIP switch, additional functions)
  - Chapter "Startup of MOVIMOT® with MLK.. in Expert mode" (→ 🗎 97)
  - Chapter "Startup of MLK32A" (→ 🗎 191)

22167811/EN – 04/2016

7.2 General information concerning startup

INFORMATION

You must comply with the general safety notes in the chapter "Safety notes" during startup.

⚠ WARNING

Risk of crushing due to missing or defective protective covers.

Severe or fatal injuries.

- Install the protective covers of the plant according to the instructions, also see the operating instructions of the gear unit.
- Never start the unit if the protective covers are not installed.

⚠ WARNING

Electric shock from capacitors that have not been fully discharged.

Severe or fatal injuries.

- Disconnect the inverter from the power. Observe the minimum switch-off time after disconnection from the supply system:
  - **1 minute**

⚠ WARNING

Device malfunction due to incorrect device setting.

Severe or fatal injuries.

- Comply with the startup instructions.
- The installation must be carried out by qualified personnel only.
- Always use the appropriate functional settings.

⚠ WARNING

Danger of burns due to hot surfaces of the unit (e.g. the heat sink).

Serious injuries.

- Do not touch the unit until it has cooled down sufficiently.

INFORMATION

To ensure fault-free operation, do not disconnect or connect power or signal lines during operation.

INFORMATION

- Remove the paint protection caps from the status LED and the two AS-Interface LEDs before startup. Remove paint protection film from the nameplates before startup.
- Observe a minimum switch-off time of 2 seconds for the K11 line contactor.

22167811/EN – 04/2016

7.3 Requirements

The following conditions apply to startup:

- The MOVIMOT® drive must be installed correctly both mechanically and electrically.
- Appropriate safety measures prevent the drives from starting up unintentionally.
- Appropriate safety measures must be taken to prevent risk of injury or damage to the machine.

The following hardware is required for startup:

- PC or laptop, see chapter "PC/laptop connection" (→ 🗎 64).

The following software is required on the PC or laptop for startup:

- MOVITOOLS® MotionStudio

7.4 MOVITOOLS® MotionStudio

"MOVITOOLS® MotionStudio" is the SEW-EURODRIVE engineering tool that you can use to access all SEW-EURODRIVE drive units. For the MOVIMOT® inverter, you can use MOVITOOLS® MotionStudio to perform diagnostics with simple applications. For more demanding applications, you can use the simple wizards available to startup and configure MOVIMOT® inverter. The scope function in MOVITOOLS® MotionStudio can be used for visualizing process values.

Install the latest software version of MOVITOOLS® MotionStudio on your PC/laptop

MOVITOOLS® MotionStudio can communicate with the drive units via a wide range of communication and fieldbus systems.

The following section describes the most straightforward application, a connection between a PC / laptop and a MOVIMOT® inverter via the diagnostics interface X50 (point-to-point connection).

22167811/EN – 04/2016

7.4.1 Integrating MOVIMOT® into the MOVITOOLS® MotionStudio

INFORMATION

For a detailed description of the following steps please refer to the comprehensive online help in MOVITOOLS® MotionStudio.

1. Start MOVITOOLS® MotionStudio.
2. Create a project and network.
3. Configure the communication channel on the PC/laptop.
4. Make sure that the 24 V supply of the MOVIMOT® inverter is connected.
5. Perform an online scan.

   Check the set scanning range in MOVITOOLS® MotionStudio.

INFORMATION

- The diagnostic interface is always assigned **address 32**. Adapt the scanning range in MOVITOOLS® MotionStudio so that address 32 is also scanned.
- The baud rate is 9.6 kBaud.
- The online scan can take some time.

6. MOVIMOT® is displayed in the MOVITOOLS® MotionStudio as shown in the example below:

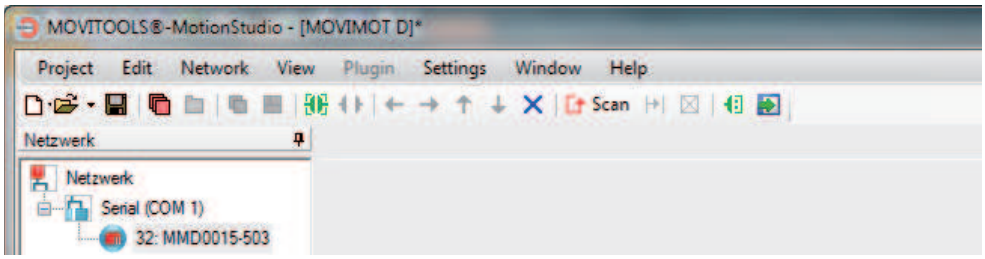

9007199785842955

7. Right-click on "32: MMD0015-5A3" to have access to MOVIMOT® startup and diagnostics tools in the context menu.

7.5 Startup and function expansion with individual parameters

The basic functionality of the MOVIMOT® drive can be expanded by using individual parameters.

INFORMATION

This "Expert" startup is only possible if:

- No additional function is activated (DIP switch S2/5 - S2/8 = "OFF")
- the Drive ID module is plugged in
- and parameter *P805 Startup mode* = "Expert"

1. Start up the unit in Easy mode.
2. Connect the PC/laptop or the DBG keypad to the MOVIMOT® inverter.
   ⇨ See chapter "PC/laptop connection" (→ 🗎 64) or "Connection of DBG keypad" (→ 🗎 63).
3. Connect the MOVIMOT® inverter to the voltage supply.
4. When using the Laptop, start MOVITOOLS® MotionStudio and integrate the MOVIMOT® inverter, see chapter "Integrating MOVIMOT® into MOVITOOLS® MotionStudio".
5. In the "Startup" > "Parameter tree" context menu, set parameter *P805 Startup mode* to "Expert".
6. Specify the parameters you want to change.
7. Check whether these parameters depend on mechanical controls.
   ⇨ See chapter "Parameters that depend on mechanical control elements" (→ 🗎 135).
8. Deactivate the respective controls by adjusting the bit-coded selection box of parameter *P102*.
   ⇨ See chapter "Parameter 102" (→ 🗎 122).
9. Change the selected parameters.
   ⇨ For information on parameter setting with the DBG keypad, refer to chapter "Parameter mode" (→ 🗎 218).
10. Check the functionality of the MOVIMOT® drive. Optimize the parameters, if required.
11. Disconnect the PC/laptop or the DBG keypad from the MOVIMOT® inverter.
12. **NOTICE!** Loss of warranted degree of protection if the screw plugs of the f1 setpoint potentiometer or the X50 diagnostic interface are installed incorrectly or not at all. Damage to the MOVIMOT® inverter.
    Make sure the screw plug of the setpoint potentiometer has a seal and screw it in.

22167811/EN – 04/2016

7.5.1 Example: Fine adjustment of setpoint f2 via MOVITOOLS® MotionStudio

1. It is essential to observe the safety and warning instructions of chapter "General information on startup" when working on the MOVIMOT® inverter.
2. Perform "Easy" startup using switch f2 for rough adjustment, e.g. setting 5 (25 Hz = 750 min^{-1}).
3. Connect the PC/laptop to the MOVIMOT® inverter.
4. Connect the MOVIMOT® inverter to the voltage supply.
5. Start MOVITOOLS® MotionStudio.
6. Create a project and network.
7. Configure the communication channel on the PC/laptop.
8. Perform an online scan.

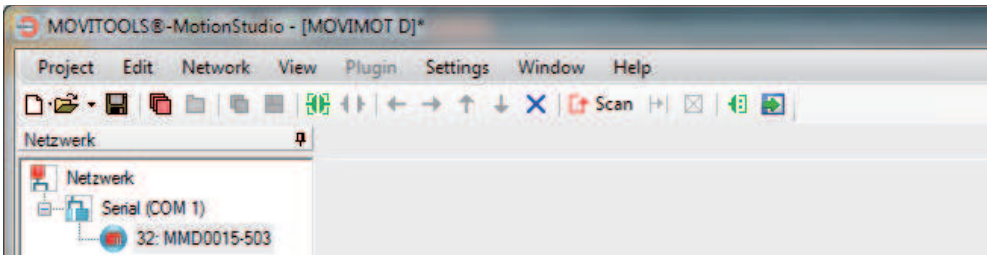

9007199785842955

9. Open the context menu by clicking the right mouse button and select the menu item "Startup" > "Parameter tree".
10. Set parameter *P805 Startup mode* to "Expert".

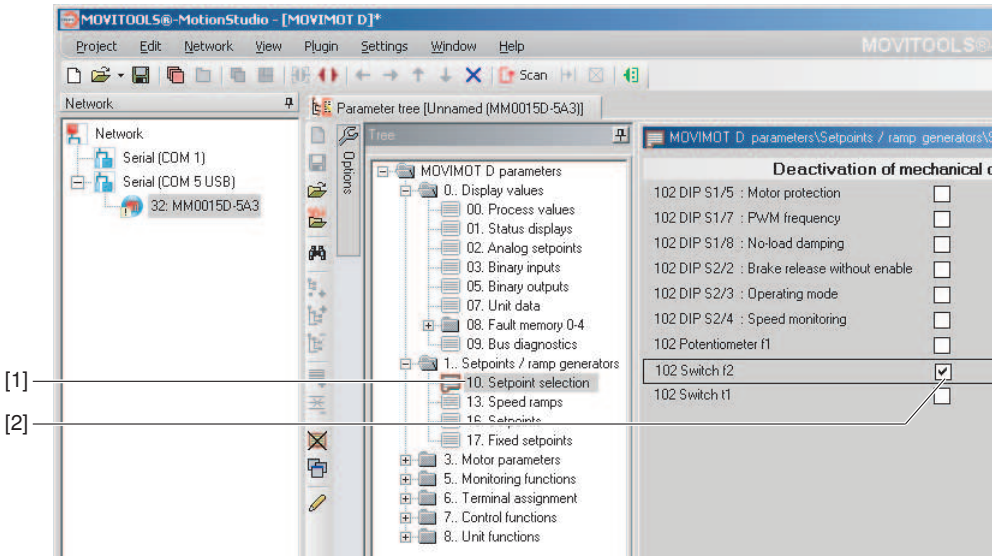

9007200618919179

22167811/EN – 04/2016

11. Open the folder "Setpoint selection" [1]. Deactivate switch f2 by setting the check box of parameter *P102 Deactivating mechanical controls* [2] (*P102:14* = "1" => parameter *P102* = "0100 0000 0000 0000").

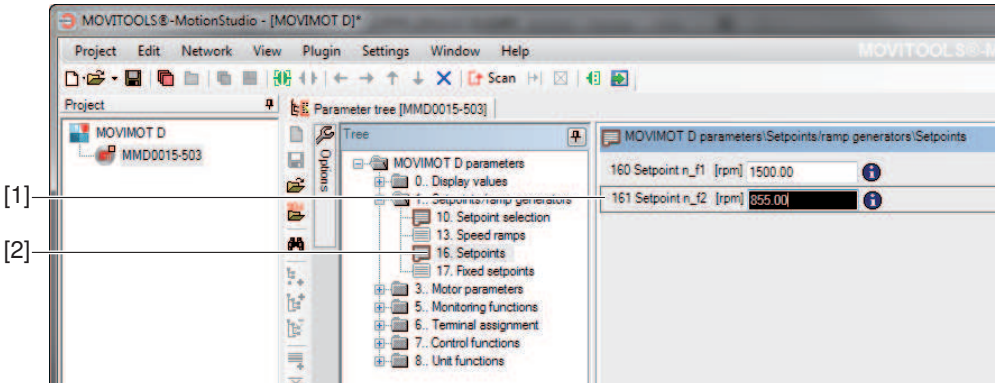

9007199789195787

12. Open the folder "Setpoints" [2]. Adjust parameter *P161 setpoint n_f2* [1] until the application runs optimally, e.g. parameter *P161* = 855 min^{-1} (= 28.5 Hz).
13. Disconnect the PC/laptop from the MOVIMOT® inverter.
14. **NOTICE!** Loss of warranted degree of protection if the screw plugs of the f1 setpoint potentiometer or the X50 diagnostic interface are installed incorrectly or not at all. Damage to the MOVIMOT® inverter.
    Make sure the screw plug of the setpoint potentiometer has a seal and screw it in.

22167811/EN – 04/2016

7.6 Startup by transferring the set of parameters

You can startup several MOVIMOT® drives with the same parameter set.

Parameters can only be transferred between two identical MOVIMOT® drives (same inverter and same motor).

INFORMATION

The parameter set can only be transferred if:

- No additional function is activated (DIP switch S2/5 - S2/8 = "OFF"),
- the Drive ID module is plugged in
- and a parameter set from one MOVIMOT® reference unit already exists.

7.6.1 Transferring the parameter set using MOVITOOLS® or the DBG keypad

1. Remove the MOVIMOT® inverter from the connection box.
2. Check the connection of the MOVIMOT® inverter.
   ⇨ See chapter "Electrical Installation".
3. Set all controls identical with those of the reference unit.
4. Place the MOVIMOT® inverter onto the connection box and screw it on tightly.
5. Connect the PC/laptop or the DBG keypad to the MOVIMOT® inverter.
   ⇨ See chapter "PC/laptop connection" (→ 🗎 64) or "Connection of DBG keypad" (→ 🗎 63).
6. Connect the 24 V supply of the MOVIMOT® inverter.
7. When using a PC/laptop, start MOVITOOLS® MotionStudio and integrate the MOVIMOT® inverter in MOVIMOT®.
   ⇨ See chapter "Integrating MOVIMOT® into the MOVITOOLS MotionStudio" (→ 🗎 100).
8. Transfer the entire parameter set of the MOVIMOT® reference unit to the MOVIMOT® inverter.
   ⇨ For information on transferring the parameter set with the DBG keypad, refer to chapter "Copy function of the DBG keypad" (→ 🗎 226).
9. Check the functionality of the MOVIMOT® drive.
10. Disconnect the PC/laptop or the DBG keypad from the MOVIMOT® inverter.
11. **NOTICE!** Loss of warranted degree of protection if the screw plugs of the f1 setpoint potentiometer or the X50 diagnostic interface are installed incorrectly or not at all. Damage to the MOVIMOT® inverter.
    Make sure the screw plug of the setpoint potentiometer has a seal and screw it in.

22167811/EN – 04/2016

7.7 Parameter list

No.	Index dec.	Sub-index dec.	Name	MOVITOOLS® MotionStudio (Range/factory setting)	MOVILINK® scaling
0__	**Display values**				
00_	**Process values**				
000	8318	0	Speed (signed)	[min^{-1}]	1 digit = 0.001 min^{-1}
002	8319	0	Frequency (signed)	[Hz]	1 digit = 0.001 Hz
004	8321	0	Output current (value)	[%I_N]	1 digit = 0.001% I_N
005	8322	0	Active current (signed)	[%I_N]	1 digit = 0.001% I_N
006	8323	0	Motor utilization	[%]	1 digit = 0.001%
008	8325	0	DC link voltage	[V]	1 digit = 0.001 V
009	8326	0	Output current	[A]	1 digit = 0.001 A
01_	**Status displays**				
010	8310	0	Inverter status	[Text]	
011	8310	0	Operating state	[Text]	
012	8310	0	Fault status	[Text]	
013	10095	1	Startup mode	[Text]	
014	8327	0	Heat sink temperature	[°C]	1 digit = 1 °C
015	8328	0	Power-applied hours	[h]	1 digit= 1 min
016	8329	0	Enable hours	[h]	1 digit= 1 min
017	10087	135	DIP switch setting S1, S2	[Bit field]	
018	10096	27	Setting of switch f2	0, 1, 2, – 10	
019	10096	29	Setting of switch t1	0, 1, 2, – 10	
02_	**Analog setpoints**				
020	10096	28	Setting of setpoint potentiometer f1	0 – 10	1 digit = 0.001
05_	**Digital outputs**				
051	8349 Bit 1	0	Setting output X10	[Bit field]	
07_	**Device data**				
070	8301	0	Device type	[Text]	
071	8361	0	Nominal output current	[A]	1 digit = 0.001 A
072	10461	3	Drive ID module slot option	[Text]	
	10461	1	Drive ID module data set	Part number Drive ID module data set	
	10461	2	Drive ID module data set version	Drive ID module data set version	

22167811/EN – 04/2016

No.	Index dec.	Sub-index dec.	Name	MOVITOOLS® MotionStudio (Range/factory setting)	MOVILINK® scaling
0__	**Display values**				
073	10095	39	AS-Interface option	0: Not available 1: MLK30A 2: MLK31A 7: MLK32A	
	9701	53	AS-Interface firmware	Firmware part number of the AS-Interface	
	9701	54	AS-Interface firmware version	Firmware version of the AS-Interface	
076	8300	0	Basic unit firmware	Part number and version of the basic unit	
102	10096	30	Deactivating mechanical control elements	[Bit field] (Display value)	
700	8574	0	Operating mode	[Text]	
–	10000	0	Motor type	[Text]	
–	8652	0	Nominal voltage	[V]	1 digit = 0.001 V
–	8640	0	Nominal frequency	[Hz]	1 digit = 0.001 Hz
–	8642	0	Nominal speed	[min^{-1}]	1 digit = 0.001 min^{-1}
–	10016	0	Nominal power	[kW]	1 digit = 0.001 kW
–	10076	13	Brake type	[Text]	
08_	**Fault memory**				
080	Fault t-0		Background information for faults that occurred in the past when t-0		
	8366	0	Fault code		
	9304	0	Fault subcode		
	8883	0	Internal fault		
	8381	0	X10	[Bit field]	
	8391	0	Inverter status	[Text]	
	8396	0	Heat sink temperature	[°C]	1 digit = 1 °C
	8401	0	Speed	[min^{-1}]	1 digit = 0.001 min^{-1}
	8406	0	Output current	[%I_N]	1 digit = 0.001% I_N
	8411	0	Active current	[%I_N]	1 digit = 0.001% I_N
	8416	0	Device utilization	[%I_N]	1 digit = 0.001% I_N
	8421	0	DC link voltage	[V]	1 digit = 0.001 V
	8426	0	Power-applied hours	[h]	1 digit= 1 min
	8431	0	Enable hours	[h]	1 digit= 1 min

22167811/EN – 04/2016

No.	Index dec.	Sub-index dec.	Name	MOVITOOLS® MotionStudio (Range/factory setting)	MOVILINK® scaling
0__	**Display values**				
081	Fault t-1		Background information for faults that occurred in the past when t-1		
	8367	0	Fault code		
	9305	0	Fault subcode		
	8884	0	Internal fault		
	8382	0	X10	[Bit field]	
	8392	0	Inverter status	[Text]	
	8397	0	Heat sink temperature	[°C]	1 digit = 1 °C
	8402	0	Speed	[min^{-1}]	1 digit = 0.001 min^{-1}
	8407	0	Output current	[%I_N]	1 digit = 0.001% I_N
	8412	0	Active current	[%I_N]	1 digit = 0.001% I_N
	8417	0	Device utilization	[%I_N]	1 digit = 0.001% I_N
	8422	0	DC link voltage	[V]	1 digit = 0.001 V
	8427	0	Power-applied hours	[h]	1 digit= 1 min
	8432	0	Enable hours	[h]	1 digit= 1 min
082	Fault t-2		Background information for faults that occurred in the past when t-2		
	8368	0	Fault code		
	9306	0	Fault subcode		
	8885	0	Internal fault		
	8383	0	X10	[Bit field]	
	8393	0	Inverter status	[Text]	
	8398	0	Heat sink temperature	[°C]	1 digit = 1 °C
	8403	0	Speed	[min^{-1}]	1 digit = 0.001 min^{-1}
	8408	0	Output current	[%I_N]	1 digit = 0.001% I_N
	8413	0	Active current	[%I_N]	1 digit = 0.001% I_N
	8418	0	Device utilization	[%I_N]	1 digit = 0.001% I_N
	8423	0	DC link voltage	[V]	1 digit = 0.001 V
	8428	0	Power-applied hours	[h]	1 digit= 1 min
	8433	0	Enable hours	[h]	1 digit= 1 min

22167811/EN – 04/2016

No.	Index dec.	Sub-index dec.	Name	MOVITOOLS® MotionStudio (Range/factory setting)	MOVILINK® scaling
0__	**Display values**				
083	Fault t-3		Background information for faults that occurred in the past when t-3		
	8369	0	Fault code		
	9307	0	Fault subcode		
	8886	0	Internal fault		
	8384	0	X10	[Bit field]	
	8394	0	Inverter status	[Text]	
	8399	0	Heat sink temperature	[°C]	1 digit = 1 °C
	8404	0	Speed	[min^{-1}]	1 digit = 0.001 min^{-1}
	8409	0	Output current	[%I_N]	1 digit = 0.001% I_N
	8414	0	Active current	[%I_N]	1 digit = 0.001% I_N
	8419	0	Device utilization	[%I_N]	1 digit = 0.001% I_N
	8424	0	DC link voltage	[V]	1 digit = 0.001 V
	8429	0	Power-applied hours	[h]	1 digit= 1 min
	8434	0	Enable hours	[h]	1 digit= 1 min
084	Fault t-4		Background information for faults that occurred in the past when t-4		
	8370	0	Fault code		
	9308	0	Fault subcode		
	8887	0	Internal fault		
	8385	0	X10	[Bit field]	
	8395	0	Inverter status	[Text]	
	8400	0	Heat sink temperature	[°C]	1 digit = 1 °C
	8405	0	Speed	[min^{-1}]	1 digit = 0.001 min^{-1}
	8410	0	Output current	[%I_N]	1 digit = 0.001% I_N
	8415	0	Active current	[%I_N]	1 digit = 0.001% I_N
	8420	0	Device utilization	[%I_N]	1 digit = 0.001% I_N
	8425	0	DC link voltage	[V]	1 digit = 0.001 V
	8430	0	Power-applied hours	[h]	1 digit= 1 min
	8435	0	Enable hours	[h]	1 digit= 1 min

22167811/EN – 04/2016

No.	Index dec.	Sub-index dec.	Name	MOVITOOLS® MotionStudio (Range/factory setting)	MOVILINK® scaling
0__	**Display values**				
09_	**Bus diagnostics**				
94/ 97	AS-Interface monitor				
	8455	0	AS-Interface output bit DO0	[Bit field, bit 9] (MLK30A: CW rotation/Stop)	MLK31A/MLK32A: Depending on the selected function module
			AS-Interface output bit DO1	[Bit field, bit 10] (MLK30A: CCW rotation/ Stop)	
			AS-Interface output bit DO2	[Bit field, bit 11] (MLK30A: Speed f2/f1)	
			AS-Interface output bit DO3	[Bit field, bit 6] (MLK30A: Reset/enable)	
			AS-Interface output bit P1	[Bit field, bit 12] (MLK30A: Parameter bit 1)	
			AS-Interface output bit P2	[Bit field, bit 13] (MLK30A: Parameter bit 2)	
			AS-Interface output bit P3	[Bit field, bit 14] (MLK30A: Parameter bit 3)	
			AS-Interface output bit P4	[Bit field, bit 15] (MLK30A: Parameter bit 4) (MLK31/32A: Reserved)	
			AS-Interface input bit DI2	[Bit field, bit 2] (MLK30A: Sensor output 1)	
			AS-Interface input bit DI3	[Bit field, bit 3] (MLK30A: Sensor output 2)	
	8458	0	AS-Interface input bit DI0	[Bit field, bit 0] (MLK30A: Ready signal)	
			AS-Interface input bit DI1	[Bit field, bit 1] (MLK30A: Automatic/manual mode)	

No.	Index dec.	Sub-index dec.	Name	MOVITOOLS® MotionStudio (Range/factory setting)	MOVILINK® scaling
1__	**Setpoints/ramp generators**				
10_	**Setpoint selection**				
102	10096	30	Deactivating mechanical control elements	[Bit field] Default: **0000 0000 0000 0000**	
13_	**Speed ramps**				
130	8807	0	Ramp t11 up	0.1 – **1** – 2000 [s] (Switch t1) [1)]	1 digit = 0.001 s
131	8808	0	Ramp t11 down	0.1 – **1** – 2000 [s] (Switch t1)[1)]	1 digit = 0.001 s

22167811/EN – 04/2016

No.	Index dec.	Sub-index dec.	Name	MOVITOOLS® MotionStudio (Range/factory setting)	MOVILINK® scaling
1__	**Setpoints/ramp generators**				
134	8474	0	Ramp t12 up = down	0.1 – **10** – 2000 [s]	1 digit = 0.001 s
135	8475	0	S pattern t12	**0: OFF** 1: Level 1 2: Level 2 3: Level 3	
136	8476	0	Stop ramp t13	0.1 – **0.2** – 2000 [s]	1 digit = 0.001 s
–	10504	1	Ramp t15 up (only with MLK31A, MLK32A)	0.1 – **1** – 2000 [s]	1 digit = 0.001 s
–	10504	11	Ramp t15 down (only with MLK31A, MLK32A)	0.1 – **1** – 2000 [s]	1 digit = 0.001 s
–	10475	2	Ramp t16 up (only with MLK31A, MLK32A)	0.1 – **1** – 2000 [s]	1 digit = 0.001 s
–	10475	1	Ramp t16 down (only with MLK31A, MLK32A)	0.1 – **1** – 2000 [s]	1 digit = 0.001 s
16_	**Setpoints**				
160	10096	35	Setpoint n_f1	0 – **1500** – 3600 [min^{-1}]	1 digit = 0.001 min^{-1}
161	10096	36	Setpoint n_f2	0 – **150** – 3600 [min^{-1}]	1 digit = 0.001 min^{-1}
–	8967	0	Active scaling factor (only for MLK30A)	(Display value)	
–	8966	0	Motor setpoint speed (only for MLK30A)	[min^{-1}]	1 digit = 0.001 min^{-1}
–	15500	0	Scaling factor 0 (only for MLK30A)	1.0 – **20.0** – 50.0	
–	15501	0	Scaling factor 1 (only for MLK30A)	1.0 – **14.3** – 50.0	
–	15502	0	Scaling factor 2 (only for MLK30A)	1.0 – **10.0** – 50.0	
–	15503	0	Scaling factor 3 (only for MLK30A)	1.0 – **6.67** – 50.0	
–	15504	0	Scaling factor 4 (only for MLK30A)	1.0 – **5.00** – 50.0	
–	15505	0	Scaling factor 5 (only for MLK30A)	1.0 – **4.00** – 50.0	
–	15506	0	Scaling factor 6 (only for MLK30A)	1.0 – **3.33** – 50.0	
–	15507	0	Scaling factor 7 (only for MLK30A)	1.0 – **2.86** – 50.0	
–	15508	0	Scaling factor 8 (only for MLK30A)	1.0 – **2.25** – 50.0	
–	15509	0	Scaling factor 9 (only for MLK30A)	1.0 – **2.22** – 50.0	

22167811/EN – 04/2016

No.	Index dec.	Sub-index dec.	Name	MOVITOOLS® MotionStudio (Range/factory setting)	MOVILINK® scaling
1__	**Setpoints/ramp generators**				
–	15510	0	Scaling factor 10 (only for MLK30A)	1.0 – **2.00** – 50.0	
–	15511	0	Scaling factor 11 (only for MLK30A)	1.0 – **1.67** – 50.0	
–	15512	0	Scaling factor 12 (only for MLK30A)	1.0 – **1.43** – 50.0	
–	15513	0	Scaling factor 13 (only for MLK30A)	1.0 – **1.25** – 50.0	
–	15514	0	Scaling factor 14 (only for MLK30A)	1.0 – **1.11** – 50.0	
–	15515	0	Scaling factor 15 (only for MLK30A)	1.0 – **1.00** – 50.0	
–	8968	0	Scaling factors changed (only for MLK30A)	YES/**NO** (Display value)	
–	8969	0	Factory setting scaling factor (only for MLK30A)	YES/**NO**	
17_	**Fixed setpoints**				
170	8489	0	Fixed setpoint n0 (only for MLK31A, MLK32A)	-3600 – **150** – 3600 [min^{-1}]	1 digit = 0.001 min^{-1}
171	8490	0	Fixed setpoint n1 (only for MLK31A, MLK32A)	-3600 – **750** – 3600 [min^{-1}]	1 digit = 0.001 min^{-1}
172	8491	0	Fixed setpoint n2 (only for MLK31A, MLK32A)	-3600 – **1500** – 3600 [min^{-1}]	1 digit = 0.001 min^{-1}
173	10096	31	Fixed setpoint n3 (only for MLK31A, MLK32A)	-3600 – **2500** – 3600 [min^{-1}]	1 digit = 0.001 min^{-1}
–	10096	38	Fixed setpoint n4 (only for MLK31A, MLK32A)	-3600 – **2500** – 3600 [min^{-1}]	1 digit = 0.001 min^{-1}
–	10096	39	Fixed setpoint n5 (only for MLK31A, MLK32A)	-3600 – **2500** – 3600 [min^{-1}]	1 digit = 0.001 min^{-1}

1) The parameter value depends on the setting of the controls.

No.	Index dec.	Sub-index dec.	Name	MOVITOOLS® MotionStudio (Range/factory setting)	MOVILINK® scaling
3__	**Motor parameters**				
30_	**Restrictions**				
300	8515	0	Start/stop speed	0 – **15** – 150 [min^{-1}]	1 digit = 0.001 min^{-1}
301	8516	0	Minimum speed	0 – **60** – 3600 [min^{-1}]	1 digit = 0.001 min^{-1}
302	8517	0	Maximum speed	0 – **3000** – 3600 [min^{-1}]	1 digit = 0.001 min^{-1}
303	8518	0	Current limit	0 – 160 [% I_N]	1 digit = 0.001% I_N
32_	**Motor adjustment**				

22167811/EN – 04/2016

No.	Index dec.	Sub-index dec.	Name	MOVITOOLS® MotionStudio (Range/factory setting)	MOVILINK® scaling
3__	**Motor parameters**				
320	8523	0	Automatic adjustment	0: OFF **1: ON**	
321	8524	0	Boost	0 – 100 [%]	1 digit = 0.001%
322	8525	0	IxR adjustment	0 – 100 [%]	1 digit = 0.001%
323	8526	0	Premagnetization	0 – 2 [s]	1 digit = 0.001 s
324	8527	0	Slip compensation	0 – 500 [min^{-1}]	1 digit = 0.001 min^{-1}
325	8834	0	no-load vibration damping	**0: OFF** 1: ON (DIP switch S1/8) [1]	
34_	**Motor protection**				
340	8533	0	Motor protection	0: OFF 1: ON (DIP switch S1/5)[1]	
341	8534	0	Type of cooling	**0: Fan cooled** 1: Forced air cooling	
347	10096	32	Motor cable length	**0** – 15 [m]	1 digit = 1 m

1) The parameter value depends on the setting of the controls.

No.	Index dec.	Sub-index dec.	Name	MOVITOOLS® MotionStudio (Range/factory setting)	MOVILINK® scaling
5__	**Control functions**				
50_	**Speed monitoring**				
500	8557	0	Speed monitoring	**0: OFF** 3: Motor/generator mode (DIP switch S2/4) [1]	
501	8558	0	Delay time	0.1 – **1** – 10 [s]	1 digit = 0.001 s
52_	**Mains off check**				
522	8927	0	Line phase failure monitoring. **Deactivating the line phase failure check in unfavorable operating conditions can damage the unit.**	0: OFF **1: ON**	
523	10096	26	Mains off check	**0: Operation on three-phase mains supply** 1: Operation with MOVITRANS®	
590	10537	1	Localization	**0: OFF** 1: ON	

1) The parameter value depends on the setting of the control elements.

22167811/EN – 04/2016

No.	Index dec.	Sub-index dec.	Name	MOVITOOLS® MotionStudio (Range/factory setting)	MOVILINK® scaling
7__	**Control functions**				
70_	**Operating modes**				
700	8574	0	Operating mode	**0: VFC** 2: VFC hoist 3: VFC DC braking 21: V/f characteristic curve 22: V/f + DC braking (DIP switch S2/3) [1]	
71_	**Standstill current**				
710	8576	0	Standstill current	**0** – 50% I_{Mot}	1 digit = 0.001% I_{Mot}
72_	Setpoint stop function				
720	8578	0	Setpoint stop function	**0: OFF** 1: ON	
721	8579	0	Stop setpoint	0 – **30** – 500 [min^{-1}]	1 digit = 0.001 min^{-1}
722	8580	0	Start offset	0 – **30** – 500 [min^{-1}]	1 digit = 0.001 min^{-1}
73_	**Brake function**				
731	8749	0	Brake release time	**0** – 2 [s]	1 digit = 0.001 s
732	8585	0	Brake application time	0 – **0.2** – 2 [s]	1 digit = 0.001 s
738	8893	0	Activation of brake release without drive enable	0: OFF **1: ON** (DIP switch S2/2)[1]	
77_	**Energy-saving function**				
770	8925	0	Energy-saving function	**0: OFF** 1: ON	

1) The parameter value depends on the setting of the control elements.

No.	Index dec.	Sub-index dec.	Name	MOVITOOLS® MotionStudio (Range/factory setting)	MOVILINK® scaling
8__	**Unit functions**				
80_	**Setup**				
802	8594	0	Factory setting	**0: No factory setting** 2: Delivery state	
803	8595	0	Parameter lock	**0: OFF** 1: ON	
805	10095	1	Startup mode	**0: Easy** 1: Expert	
81_	**Serial communication**				

22167811/EN – 04/2016

No.	Index dec.	Sub-index dec.	Name	MOVITOOLS® MotionStudio (Range/factory setting)	MOVILINK® scaling
8__	**Unit functions**				
812	8599	0	RS485 timeout delay	[s] (only display)	1 digit = 0.001 s
83_	**Fault responses**				
832	8611	0	Motor overload error response	0: No response 1: Display error 2: Immediate stop/Locking **4: Rapid stop/Locking** 12: Normal stop/locking	
84_	**Reset behavior**				
840	8617	0	Manual reset	**0: No** 1: Yes	
86_	**Modulation**				
860	8620	0	PWM frequency	**0: 4 kHz** 1: 8 kHz 3: 16 kHz (DIP switch S1/7) [1)]	

1) The parameter value depends on the setting of the control elements.

22167811/EN – 04/2016

7.8 Parameter description

7.8.1 Display values

Parameter 000

Speed (signed)

The displayed speed is the calculated actual speed.

Parameter 002

Frequency (signed)

Output frequency of the inverter

Parameter 004

Output current (amount)

Apparent current in the range 0 – 200% of the rated unit current.

Parameter 005

Active current (signed)

Active current in the range -200% – +200% of the nominal unit current

The sign of the active current depends on the direction of rotation and the type of load:

Direction of rotation	load	Speed	Active current
Clockwise rotation	Motor	Positive (n > 0)	Positive (I_W > 0)
Counterclockwise rotation	Motor	Negative (n < 0)	Negative (I_W < 0)
Clockwise rotation	Regenerative	Positive (n > 0)	Negative (I_W < 0)
Counterclockwise rotation	Regenerative	Negative (n < 0)	Positive (I_W > 0)

Parameter 006

Motor utilization

Motor utilization in [%], calculated using a motor temperature model

Parameter 008

DC link voltage

Voltage in [V] measure in the DC link

Parameter 009

Output current (amount)

Apparent current in [A]

22167811/EN – 04/2016

Parameter 010

Inverter status

Inverter statuses

- INHIBITED
- ENABLED

Parameter 011

Operating status

The following operating statuses are available:

- 24 V OPERATION
- CONTROLLER INHIBIT
- NO ENABLE
- STANDSTILL CURRENT
- ENABLE
- FACTORY SETTING
- ERROR
- TIMEOUT

Parameter 012

Error status

Error status in text form

Parameter 013

Startup mode

Startup mode "Easy" or "Expert"

Parameter 014

Heat sink temperature

Heat sink temperature of the inverter

Parameter 015

Hours of operation

The total of hours in which the inverter was connected to the external DC 24 V supply

Parameter 016

Enable hours

Sum of hours in which the output stage of the inverter was enabled

22167811/EN – 04/2016

Parameter 017

DIP switch setting S1 and S2

Display of DIP switch settings for S1 and S2:

DIP switches	Bit in index 10087.135	Functionality	
S1/1	Bit 0	Unit address	Unit address bit 2^0
S1/2	Bit 1		Unit address bit 2^1
S1/3	Bit 2		Unit address bit 2^2
S1/4	Bit 3		Unit address bit 2^3
S1/5	Bit 11	Motor protection	0: Motor protection on 1: Motor protection off
S1/6	Bit 9	Increased short-time torque	0: Motor adjusted 1: Motor power rating one stage smaller
S1/7	Bit 12	PWM cycle frequency	0: 4 kHz 1: Variable (16, 8, 4 kHz)
S1/8	Bit 13	No-load damping	0: Off 1: On
S2/1	Bit 7	Brake type	0: Standard brake 1: Optional brake
S2/2	Bit 15	Brake release without drive enable	0: Off 1: On
S2/3	Bit 6	Control modes	0: VFC control 1: V/f control
S2/4	Bit 16	Speed monitoring	0: Off 1: On
S2/5	Bit 17	Additional function	Additional function setting bit 2^0
S2/6	Bit 18		Additional function setting bit 2^1
S2/7	Bit 19		Additional function setting bit 2^2
S2/8	Bit 20		Additional function setting bit 2^3

The display of the DIP switch setting is independent of whether the DIP switch function is activated or deactivated.

22167811/EN – 04/2016

Parameter 018

Setting switch f2

Display of switch f2 setting

The display of the DIP switch setting is independent of whether the DIP switch function is activated or deactivated.

Parameter 019

Setting of switch t1

Displays the setting of switch t1

The display is independent of whether the switch function is activated or deactivated.

Parameter 020

Setting of setpoint potentiometer f1

Displays the setting of setpoint potentiometer f1

The display is independent of whether the switch function is activated or deactivated.

Parameter 051

Setting output X10

Displays the status of the output for controlling the BEM option

Parameter 070

Device type

The unit type is displayed

Parameter 071

Nominal output current

The rated unit current is displayed in [A]

22167811/EN – 04/2016

Parameter 072

DIM slot option

Displays the drive ID module type which is used in the drive ID module slot X3

Parameter value	Type of the Drive ID module
0	No Drive-ID module
1 – 9	Reserved
10	DT/DV/400/50
11	Drive ID module special design
12	DRS/400/50
13	DRE400/50
14	DRS/460/60
15	DRE/460/60
16	DRS/DRE/380/60 (ABNT)
17	DRS/DRE/400/50/60 (50/60 Hz voltage range)
18	Reserved
19	DRP/230/400/50
20	DRP/266/460/50
21	EDRE/3D/400/50
22	DT56L4/BMG02
23	DRE..J/400/50
24	DRU..J/400/50
25	DRN/400/50
26	DRN/460/60
27	DRS/DRN/50/60
28 – 31	Reserved

Display of the part number and the data set version on the drive ID module

Parameter 073

Type of AS-Interface option (only for MOVIMOT® with AS-Interface)

Display of the type of the AS-Interface option

Parameter value	Type of AS-Interface option
0	AS-Interface option is not available.
1	MLK30A binary slave
2	MLK31A double slave
7	MLK32A binary slave

22167811/EN – 04/2016

Parameter index 9701.53

Firmware part number of AS-Interface option (only for MOVIMOT® with AS-Interface)

Display of the firmware part number of the AS-Interface option

Parameter index 9701.54

Firmware version of AS-Interface option (only for MOVIMOT® with AS-Interface)

Display of the firmware version of the AS-Interface option

Parameter 076

Firmware basic unit

Displays the part number and version of the unit firmware

Parameter 700

Operating mode

The selected operating mode is displayed

Parameter index 10000.0

Motor type

Display of the installed motor type (according to nameplate).

Parameter index 8652.0

Nominal voltage

Display of the nominal voltage of the drive in [V] (according to nameplate).

Parameter index 8640.0

Nominal frequency

Display of the nominal frequency of the drive in [Hz] (according to nameplate).

Parameter index 8642.0

Nominal speed

Display of the nominal speed of the drive in [min^{-1}] (according to nameplate).

Parameter index 10016.0

Nominal power

Display of the nominal power of the drive in [kW] (according to nameplate).

Parameter index 10076.13

Brake type

Display of the installed brake type (according to nameplate).

22167811/EN – 04/2016

Parameter 080 – 084

Error t-0 – t-4

The unit saves diagnostic data when an error occurs. The last five errors are displayed in the error memory.

Parameter 094/097

AS-Interface monitor (only for MOVIMOT® MLK30A with AS-Interface option)

The parameters *P094* and *P097* are used as bus monitor of the AS-Interface and display the transmission of AS-Interface bits from and to the MOVIMOT® inverter.

The following table shows the assignment of AS-Interface output bits:

Index	Subindex	Bit	AS-Interface bit	Meaning
8455	0	9	DO0	CW operation/Stop
8455	0	10	DO1	CCW operation/Stop
8455	0	11	DO2	Speed f2/speed f1
8455	0	6	DO3	Reset/controller enable
8455	0	12	P0	Parameter bit 1
8455	0	13	P1	Parameter bit 2
8455	0	14	P2	Parameter bit 3
8455	0	15	P3	Parameter bit 4

The following table shows the assignment of the AS-Interface input bits:

Index	Subindex	Bit	AS-Interface bit	Meaning
8458	0	0	DI0	Ready signal
8458	0	1	DI1	Automatic operation/manual operation
8455	0	2	DI2	Sensor input 1
8455	0	3	DI3	Sensor input 2

Parameter 094/097

AS-Interface monitor (only for MOVIMOT® with AS-Interface option MLK31A or MLK32A)

The parameters *P094* and *P097* are used as bus monitor of the AS-Interface and display the transmission of AS-Interface bits from and to the MOVIMOT® inverter.

The meaning of the AS-Interface data bits depends on the selected function module.

22167811/EN – 04/2016

7.8.2 Setpoints/ramp generators

Parameter 102

Deactivating mechanical controls

Use this bit-coded selection box to deactivate the mechanical controls of the MOVIMOT® inverter. The value of the parameter set at the factory enables all mechanical controls.

Bit	Meaning	NOTE	
0	Reserved		
1	Deactivation of the DIP switch S1/1 – S1/4 (RS485 address)	Bit not set:	DIP switches S1/1 – S1/4 active
		Bit set:	DIP switches S1/1 – S1/4 not active Setting the RS485 address, RS485 group address and control / setpoint source using parameters *P810*, *P811* and *P100*
2 – 4	Reserved		
5	Deactivation of DIP switch S1/5 (motor protection)	Bit not set:	DIP switch S1/5 active
		Bit set:	DIP switch S1/5 not active: Switching the motor protection function on / off using the parameter *P340*.
6	Reserved		
7	Deactivation of DIP switch S1/7 (PWM cycle frequency)	Bit not set:	DIP switch S1/7 active
		Bit set:	DIP switch S1/7 not active Setting the PWM cycle frequency using parameter *P860*
8	Deactivation of DIP switch S1/8 (no-load damping)	Bit not set:	DIP switch S1/8 active
		Bit set:	DIP switch S1/8 not active Activation / deactivation of no-load damping using parameter *P325*
9	Reserved		
10	Deactivation of DIP switch S2/2 (brake release)	Bit not set:	DIP switch S2/2 active
		Bit set:	DIP switch S2/2 not active Activation / deactivation of brake release without drive enable using parameter *P738*
11	Deactivation of DIP switch S2/3 (operating mode)	Bit not set:	DIP switch S2/3 active
		Bit set:	DIP switch S2/3 not active Selection of operating mode using parameter *P700*

22167811/EN – 04/2016

Bit	Meaning	NOTE	
12	Deactivation of DIP switch S2/4 (speed monitoring)	Bit not set:	DIP switch S2/4 active
		Bit set:	DIP switch S2/4 not active Activation / deactivation of speed monitoring using parameter *P500*
13	Deactivating the setpoint potentiometer f1	Bit not set:	Setpoint potentiometer f1 active
		Bit set:	Setpoint potentiometer f1 not active Setting the setpoint and the maximum speed using parameter *P160* and *P302*
14	Deactivating switch f2	Bit not set:	Switch f2 active
		Bit set:	Switch f2 not active Setting the setpoint and the maximum speed using parameter *P161* and *P301*
15	Deactivating switch t1	Bit not set:	Switch t1 active Acceleration ramp time = deceleration ramp time
		Bit set:	Switch t1 not active Setting the ramp times using parameter *P130* and *P131*

Parameter 130

Ramp t11 up

Acceleration ramp

The ramp time is based on a setpoint step change of 1500 min^{-1} (50 Hz).

Parameter 131

Ramp t11 down

Deceleration ramp

The ramp time is based on a setpoint step change of 1500 min^{-1} (50 Hz).

22167811/EN – 04/2016

Parameter 134

Ramp t12 up = down

Acceleration and deceleration ramp at S pattern

The ramp time is based on a setpoint step change of 1500 min^{-1} (50 Hz).

The ramp time sets the acceleration and deceleration if parameter *P135 S pattern t12* has been set to grade 1, grade 2 or grade 3.

INFORMATION

It is not possible to determine a ramp time via process data when parameter *P135 S pattern t12* is activated.

Parameter 135

S pattern t12

This parameter determines the pattern grade (1 = low, 2 = medium, 3 = high) of the ramp. The S pattern is used for rounding off the ramp and allows for a soft acceleration of the drive in the event of a setpoint change. The following figure shows the effect of the S pattern:

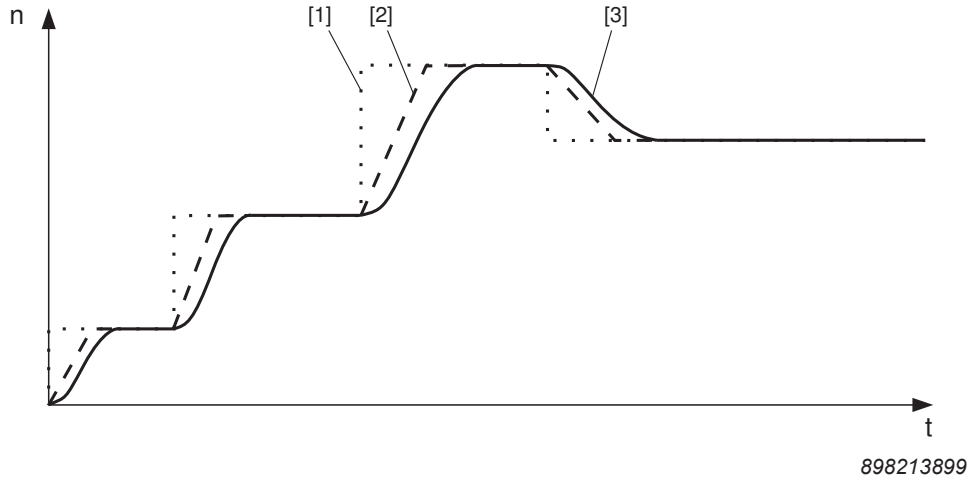

[1] Setpoint selection
[2] Speed profile without S pattern
[3] Speed profile with S pattern

INFORMATION

Once started, an S pattern phase is interrupted if an error occurs with the stop ramp.

If the setpoint is reduced or the enable signal is revoked, the started S pattern phase is completed. Thus the drive can accelerate until the end of the S pattern phase despite the setpoint reduction.

Parameter 136

Stop ramp t13

The stop ramp is the deceleration ramp when an internal error occurs.

The ramp time is based on a setpoint step change of 1500 min^{-1} (50 Hz).

22167811/EN – 04/2016

Parameter index 10504.1

Ramp t15 up (only for MOVIMOT® with AS-Interface option MLK31A or MLK32A)
Acceleration ramp, depending on active function module.
The ramp time is based on a setpoint step change of 1500 min^{-1} (50 Hz).

Parameter index 10504.11

Ramp t15 down (only for MOVIMOT® with AS-Interface option MLK31A or MLK32A)
Deceleration ramp, depending on active function module.
The ramp time is based on a setpoint step change of 1500 min^{-1} (50 Hz).

Parameter index 10475.2

Ramp t16 up (only for MOVIMOT® with AS-Interface option MLK31A or MLK32A)
Acceleration ramp, depending on active function module.
The ramp time is based on a setpoint step change of 1500 min^{-1} (50 Hz).

Parameter index 10475.1

Ramp t16 down (only for MOVIMOT® with AS-Interface option MLK31A or MLK32A)
Deceleration ramp, depending on active function module.
The ramp time is based on a setpoint step change of 1500 min^{-1} (50 Hz).

Parameter 160

Setpoint n_f1 (only for MOVIMOT® with AS-Interface option MLK30A)
The setpoint n_f1 is valid if

- the setpoint potentiometer f1 is deactivated, i.e. when parameter *P102:13* = "1"
- and the AS-Interface bit DO2 "speed f2/speed f1" = "0".

Parameter 160

Setpoint n_f1 (only for MOVIMOT®with AS-Interface option MLK31A or MLK32A)
The setpoint n_f1 is valid if

- the setpoint potentiometer f1 is deactivated, i.e. when parameter *P102:13* = "1"
- and the function module 7_{hex} is active.

Parameter 161

Setpoint n_f2 (only for MOVIMOT® with AS-Interface option MLK30A)
The setpoint n_f2 is valid if

- the switch f2 is deactivated, i.e. when parameter *P102:14* = "1"
- and the AS-Interface bit DO2 "speed f2/speed f1" = "1".

Parameter 161

Setpoint n_f2 (only for MOVIMOT®with AS-Interface option MLK31A or MLK32A)
The setpoint n_f2 is valid if

- the switch f2 is deactivated, i.e. when parameter *P102:14* = "1"
- and the function module 7_{hex} is active.

22167811/EN – 04/2016

Parameter index 8967.0

Display scaling factor (only for MOVIMOT® with AS-Interface option MLK30A)

Display of the current scaling factor of the setpoint speed.

Parameter index 8966.0

Motor setpoint speed (only for MOVIMOT® with AS-Interface option MLK30A)

Display of the current setpoint speed of the MOVIMOT® drive.

Parameter index 15500.0 – 15515.0

Scaling factor 0 – 15 (only for MOVIMOT® with AS-Interface option MLK30A)

These parameter indexes are used to set the scaling factors. The scaling factors are factors of the setpoint speed. The setpoint scaling only affects the setpoint set via the setpoint potentiometer f1. The current scaling factor is determined by the parameter bits, see chapter "Setpoint scaling via parameter bits" (→ 🗎 143).

Parameter index 8968.0

Scaling factors changed (only for MOVIMOT® with AS-Interface option MLK30A)

Display as to whether at least one scaling factor has been changed compared to the corresponding default value.

Parameter index 8969.0

Factory setting of scaling factors (only for MOVIMOT® MLK30A with AS-Interface option)

You can use this parameter index to reset all the scaling factors (parameter indexes 15500.0 – 15515.0) to their factory setting.

Parameter 17_

Fixed setpoint n0 – n5

Fixed setpoints n0 – n5 depend on the active function module.

The sign of the fixed setpoint and the function selected at outputs DO0 – DO3 determine the direction of rotation of the motor.

Fixed setpoint sign (n0 – n5)	Selected function (DO0 – DO3)	Direction of rotation Drive
Positive (n > 0)	CW rotation	CW rotation
Positive (n > 0)	CCW rotation	CCW rotation
Negative (n < 0)	CW rotation	CCW rotation
Negative (n < 0)	CCW rotation	CW rotation

22167811/EN – 04/2016

7.8.3 Motor parameters

Parameter 300

Start/stop speed

This parameter defines the smallest speed request which the inverter sends to the motor when enabled. The transition to the speed determined in the setpoint selection is made using the active acceleration ramp. Upon revoking the enable function, the parameter will be set as to the frequency at which the MOVIMOT® inverter will detect a motor standstill and start to apply the brakes.

Parameter 301

Minimal speed (when switch f2 is deactivated)

This parameter defines the minimum speed n_{min} of the drive.

The drive does not fall below this speed value even when the setpoint specification is slower than the minimum speed (exception: direction of rotation reversal or drive stop).

Parameter 302

Maximum speed (when switch f1 is deactivated)

This parameter defines the maximum speed n_{max} of the drive.

The drive does not exceed this speed value even when the setpoint specification is higher than the maximum speed.

If you set $n_{min} > n_{max}$, then the value set in n_{min} applies to the minimum speed and the maximum speed.

Parameter 303

Current limit

The internal current limitation is based on the apparent output current. In order to implement stall protection for the connected motor, the inverter automatically decreases the current limit internally in the field weakening range.

Parameter 320

Automatic adjustment

When adjustment is activated, the motor is calibrated each time the operating status changes to ENABLE.

If adjustment is deactivated, the calibration function and the thermal memory of the UL protective function is inactive.

When using according to UL approval, you must leave the parameter *P320* set to "ON".

Parameter 321

Boost

If parameter *P320 Automatic adjustment* = "ON", the inverter sets parameter *P321 BOOST* automatically. This parameter does not usually need to be set manually.

In exceptional cases, manual setting may be necessary to increase the breakaway torque.

22167811/EN – 04/2016

Parameter 322

IxR compensation

If parameter *P320 Automatic adjustment* = "ON", the inverter sets parameter *P322 IxR adjustment* automatically. Only specialists are permitted to change this parameter manually to optimize the settings.

Parameter 323

Pre-magnetization

The pre-magnetization time allows a magnetic field to be built up in the motor after the inverter is enabled.

Parameter 324

Slip compensation

Slip compensation increases the speed accuracy of the motor. Enter the nominal slip of the connected motor as a manual entry.

The slip compensation is designed for a ratio of load mass moment of inertia to motor moment of inertia of smaller than 10. If control starts oscillating, you must reduce the slip compensation or set it to 0, if required.

Parameter 325

No-load vibration damping (when DIP switch S1/8 is deactivated)

No-load vibration damping can be activated when the motor tends to be unstable under no load conditions.

Parameter 340

Motor protection (when DIP switch S1/5 is deactivated)

Activation/deactivation of the thermal protection model for MOVIMOT®

When this function is activated, MOVIMOT® takes over the thermal protection of the drive by electronic means.

Parameter 341

Type of cooling

This parameter is used for defining the cooling type (fan cooled or forced cooling) that is the basis for calculating the motor temperature.

Parameter 347

Motor cable length

This parameter is used for defining the motor cable length (= length of hybrid cable from SEW-EURODRIVE between MOVIMOT® and motor) that is the basis for calculating the motor temperature. This parameter must only be changed if the unit is installed close to the motor.

22167811/EN – 04/2016

7.8.4 Monitoring functions

Parameter 500

Speed monitoring (when DIP switch S2/4 is deactivated)

MOVIMOT® performs speed monitoring by evaluating operations at the current limit. Speed monitoring is triggered when the current limit is maintained for the duration of the set deceleration time (parameter *P501*).

Parameter 501

Deceleration time

The set current limit can be reached during acceleration, deceleration, or load peaks.

The deceleration time prevents speed monitoring from responding too sensitively. The current limit must be maintained for the duration of the set deceleration time before monitoring responds.

Parameter 522

Line phase failure check

NOTICE

Deactivating the line phase failure monitoring can damage the inverter if conditions are unfavorable.

Inverter damage.

- Deactivate the line phase failure check with short-term asymmetries of the line voltage.
- Make sure that the MOVIMOT® drive is always supplied with all 3 phases of the line voltage.

This monitoring system must be deactivated in order to prevent the line phase failure check from triggering with asymmetrical supply systems.

Parameter 523

Power off monitoring

Use this parameter to adjust the power off monitoring function of the inverter for operation with MOVITRANS®.

Parameter 590

Localization

This parameter can be used to activate the localization function in order to localize the MOVIMOT® drive in the system. If the localization function is active, the status LED on the MOVIMOT® inverter flashes green/red/green. After 5 min, the MOVIMOT® inverter automatically deactivates the localization function again.

22167811/EN – 04/2016

7.8.5 Control functions

Parameter 700

Operating mode (only for MOVIMOT® with AS-Interface)

This parameter is used to set the basic operating mode of the inverter (id DIP switch S2/3 is deactivate).

VFC / V/f characteristic

Default setting for asynchronous motors. This setting is suitable for general applications such as conveyor belts, trolleys, etc.

VFC hoist

The hoist function automatically provides all functions required for operating a simple lifting application. For the hoist function to be performed correctly, the motor brake must be controlled using the inverter. The VFC hoist operating mode affects the following parameters:

No.	Index dec.	Sub-index dec.	Name	Value
P300	8515	0	Start/stop speed	= 60 min^{-1} If the start/stop speed is set to less than 60 min^{-1}.
P301	8516	0	Minimum speed	= 60 min^{-1} If the minimum speed is set to less than 60 min^{-1}
P303	8518	0	Current limit	= Nominal motor current If the current limit is set to a lower value than the nominal motor current
P323	8526	0	Premagnetization	= 20 ms If premagnetization is set to a lower value than 20 ms
P500	8557	0	Speed monitoring	= 3: motoring/regenerative operation
P731	8749	0	Brake release time	= 200 ms If the brake release time is set to a lower value than 200 ms
P732	8585	0	Brake application time	= 200 ms If the brake application time is set to a lower value than 200 ms
P738	8893	0	Activation of brake release without drive enable	= 0: OFF

In VFC hoist operating mode, the MOVIMOT® inverter checks whether the values of these parameters are permitted.

The speed monitoring function cannot be deactivated in VFC hoist operating mode.

The function "Brake release without drive enable" cannot be activated in VFC hoist operating mode.

VFC / V/f DC braking

This setting means the asynchronous motor brakes by using current injection. The motor brakes without a braking resistor on the inverter.

22167811/EN – 04/2016

⚠ WARNING

Danger due to uncontrolled braking. With DC braking, guided stops are not possible and certain ramp values cannot be observed.

Severe or fatal injuries.

- Use a different operating mode if required.

Parameter 710

Standstill current

⚠ WARNING

Electric shock caused by voltages in the connection box. A communication timeout does not interrupt the standstill current.

Severe or fatal injuries

- Disconnect the inverter from the supply system and wait at least for the specified amount of time:
  - **1 minute**

When the standstill current function is activated, the inverter injects a current into the motor at standstill.

The standstill current fulfills the following functions:

- When the ambient temperature of the motor is low, the standstill current prevents the risk of condensation and freezing of the brake. Set the current level in such a way that the motor will not overheat.
- If you have activated the standstill current, you can enable the motor without pre-magnetization.

When the standstill function is activated, the output stage remains enabled even in the "NO ENABLE" status to inject the motor standstill current. In the event of an error, the current supply of the motor is interrupted depending on the respective error response.

22167811/EN – 04/2016

Parameter 720 – 722

Setpoint stop function

Stop setpoint

Start offset

If the setpoint stop function is activated, the inverter is enabled when the speed setpoint is larger than the stop setpoint + start offset.

Inverter enable is revoked when the speed setpoint falls below the stop setpoint.

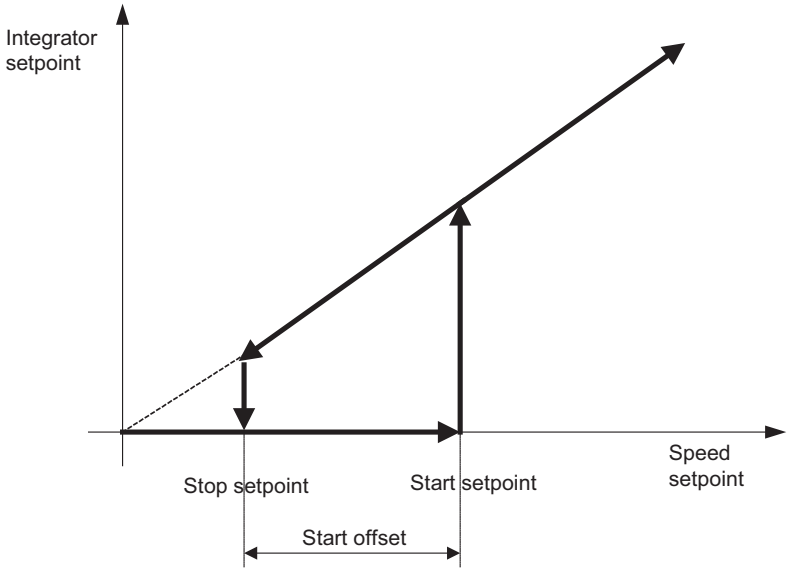

9007199746515723

Parameter 731

Brake release time

This parameter is used for defining how long the motor is to run at minimum speed after pre-magnetization ends. This time is necessary for opening the brake completely

Parameter 732

Brake application time

You can use this parameter to set the time required for the mechanical brake to apply.

22167811/EN – 04/2016

Parameter 738

Activation of brake release without drive enable

(when DIP switch S2/2 is deactivated)

If this parameter is set to the value "ON", the brake can be released even if the drive is not enabled.

This functionality is only available when the motor brake is being controlled by the inverter.

The brake is always applied when the unit is not ready.

The brake cannot be released when the drive is not enabled in conjunction with the hoisting function.

Parameter 770

Energy saving function

If this parameter is set to "ON", the inverter reduces the no-load current.

7.8.6 Unit functions

Parameter 802

Factory setting

If you set this parameter to "Delivery state", all parameters

- that have a factory setting
- and can **not** be set using DIP switches S1/S2 or switches t1/f2

are set to this factory setting value.

For those parameters that are set at the DIP switches S1/S2 or at switches t1/f1, the setting of the mechanical setting element becomes active when the factory setting "Delivery state" is selected.

Parameter 803

Parameter lock

If this parameter is set to "ON", you cannot change any of the parameters except the parameter lock. It is a good idea to use this setting once you have finished starting up the unit and optimizing the parameters. You can only change the parameters again when this parameter is set to "OFF".

22167811/EN – 04/2016

Parameter 805

Startup mode

Parameterization of the startup mode

- **Easy mode**

  The MOVIMOT® is started up quickly and easily in Easy mode using DIP switches S1, S2 and switches f2, t1.

- **"Expert" mode**

  In "Expert" mode additional parameters are available.

Parameter 812

RS485 timeout delay

Use this parameter to set the timeout monitoring interval of the RS485 interface.

Parameter 832

Motor overload error response

Use this parameter to determine the error response that is performed in the event of a motor overload (error code 84).

Parameter 840

Manual reset

If an error is present at the MOVIMOT® inverter, you can acknowledge the error by setting this parameter to "ON". Once the error has been reset, the parameter is set automatically to "OFF" again. If the power section does not indicate an error, setting the parameter to "ON" has no effect.

Parameters 860

PWM frequency (when DIP switch S1/7 is deactivated)

You can use this parameter to set the maximum cycle frequency at the inverter output. The cycle frequency can change automatically depending on the unit utilization.

22167811/EN – 04/2016

7.8.7 Parameters that depend on mechanical control elements

The following mechanical control elements influence the user parameters:

- DIP switch S1
- DIP switch S2
- Setpoint potentiometer f1
- Switch f2
- Switch t1

Control element	Influenced parameter	Effect of parameter *P102* Bit	
DIP switch S1/5	*P340* *Motor protection*	5	Bit not set: Activation/deactivation of the motor protection function at DIP switch S1/5
			Bit set: Activation/deactivation of motor protection function using parameters
DIP switch S1/7	*P860* *PWM frequency*	7	Bit not set: Selection of the PWM frequency at DIP switch S1/7
			Bit set: Selecting the PWM frequency using parameters
DIP switch S1/8	*P325* *No-load vibration damping*	8	Bit not set: Activation/deactivation of the no-load vibration damping function at DIP switch S1/8
			Bit set: Activation / deactivation of no-load vibration damping using parameters
DIP switch S2/2	*P738* *Brake release without drive enable*	10	Bit not set: Activation/deactivation of the function "Brake release without drive enable" at DIP switch S2/2
			Bit set: Activation / deactivation of the function "Brake release without drive enable" using parameters
DIP switch S2/3	*P700* *Operating mode*	11	Bit not set: Selection of the operating mode at DIP switch S2/3
			Bit set: Selecting the operating mode using parameters

22167811/EN – 04/2016

Control element	Influenced parameter	Effect of parameter *P102* Bit	
DIP switch S2/4	*P500* *Speed monitoring*	12	Bit not set: Activation/deactivation of the speed monitoring function at DIP switch S2/4
			Bit set: Activation/deactivation of speed monitoring using parameters
Setpoint potentiometer f1	*P302* *Maximum speed*	13	Bit not set: Setting the maximum speed at setpoint potentiometer f1
			Bit set: Setting the maximum speed using parameters
Switch f2	*P301* *Minimum speed*	14	Bit not set: Setting the minimum speed at switch f2
			Bit set: Setting the minimum speed using parameters
Switch t1	*P130* *Acceleration ramp* *P131* *Deceleration ramp*	15	Bit not set: Setting the ramps at switch t1
			Bit set: Setting the ramps using parameters

22167811/EN – 04/2016

8 Startup of MLK30A

INFORMATION

For the startup with MLK30A, also adhere to chapter "Startup of MOVIMOT® with MLK.. in Expert mode".

8.1 Startup procedure

⚠ WARNING

Electric shock from capacitors that have not been fully discharged.

Severe or fatal injuries.

- Disconnect the inverter from the power. Observe the minimum switch-off time after disconnection from the supply system:
  - **1 minute**

1. Remove the MOVIMOT® inverter from the connection box.
2. Set the required AS-Interface address:
   ⇨ With a hand-held programming device (→ 🗎 140)
   ⇨ or with a master (see description of the AS-Interface master)
3. Check the connection of the MOVIMOT® inverter.
   ⇨ See chapter "Electrical Installation".
4. Set the type of 24 V supply via the switch S5 (→ 🗎 141).
5. Set DIP switches S1/1 – S1/4 as follows.

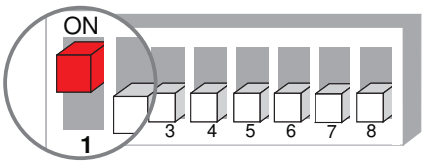

9007199592524939

6. Set the first speed at the setpoint potentiometer f1 (active when the AS-Interface bit DO2 = "0"). Factory setting: approx. 50 Hz (1500 min^{-1})

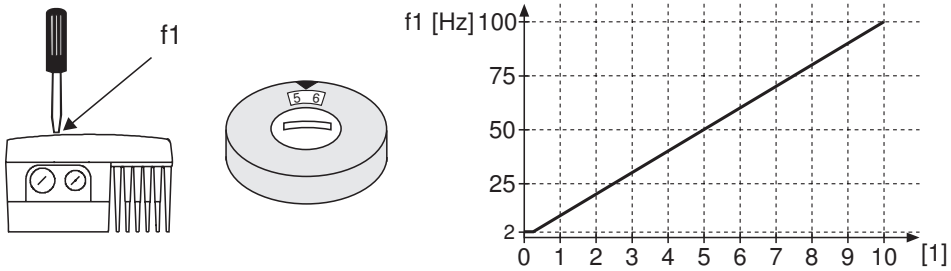

18014398838894987

[1] Potentiometer setting

22167811/EN – 04/2016

7. **NOTICE!** Loss of warranted degree of protection if the screw plugs of the f1 setpoint potentiometer or the X50 diagnostic interface are installed incorrectly or not at all. Damage to the MOVIMOT® inverter.
   Make sure the screw plug of the setpoint potentiometer has a seal and screw it in.
8. Set the second speed at switch f2 (active if AS-Interface bit DO2 = "1").

Switch f2											
Detent setting	0	1	2	3	4	5	6	7	8	9	10
Setpoint f2 [Hz]	5	7	10	15	20	25	35	50	60	70	100

INFORMATION

During operation, the first speed is infinitely variable using the setpoint potentiometer f1 which is accessible from outside.

Speeds f1 and f2 can be set independently of each other.

9. Set the ramp time at the switch t1.
   ⇨ The ramp times are based on a setpoint step change of 1500 min^{-1} (50 Hz).

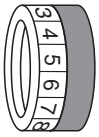

Switch t1											
Detent setting	0	1	2	3	4	5	6	7	8	9	10
Ramp time t1 [s]	0.1	0.2	0.3	0.5	0.7	1	2	3	5	7	10

10. Place the MOVIMOT® inverter onto the connection box and screw it on tightly.
11. Switch on the following voltages:
    ⇨ AS-Interface voltage
    ⇨ DC 24 V auxiliary voltage (only for 24 V supply via the black AUX-PWR cable)
    ⇨ Line voltage

22167811/EN – 04/2016

8.1.1 Assigning the slave address

MOVIMOT® drives with MLK3.A AS-Interface option are set to address 0 by default.

You have the following options for assigning the AS-Interface address of the MOVIMOT® drive with AS-Interface option MLK3.A (address 1 - 31):

- Addresses are assigned automatically within a configured AS-Interface system when replacing a MOVIMOT® drive with MLK3.A AS-Interface option.

  The following prerequisites must be fulfilled:

  – The new MOVIMOT® drive with AS-Interface option MLK3.A must have the address 0.

  – If you need to replace several MOVIMOT® drives with AS-Interface option MLK3.A, you must replace them individually (one after the other).

- Manual address assignment via the system master

  The drives must be connected to the AS-Interface cable one after another. Doing so prevents several MOVIMOT® drives with AS-Interface option MLK3.A from being assigned the same address.

- Manual address assignment using a hand-held AS-Interface programming device.

  Observe the notes in the next chapter when connecting the MOVIMOT® drive with AS-Interface option MLK3.A to the AS-Interface cable.

22167811/EN – 04/2016

Assigning the slave address using a hand-held programming device

Hand-held AS-Interface programming devices offer the following functions:

- Reading and changing an AS-Interface slave address
- Reading off the AS-Interface profile
- Reading and changing the data and parameter bits
- Function check and test run.

  Hand-held programming devices do not provide sufficient current for the operation. This is why an external voltage supply (AUX-PWR) is required for the function check and the test run.

When using a hand-held programming device, you need a **2-core** connection cable that fits onto the AS-Interface plug connector on MOVIMOT® (see the following figure).

1: AS-Interface +
2: 0V24 [1]
3: AS-Interface -
4: 24V [1]

1127256715

[1] Do not connect pin 2 and 4 for the address assignment!

NOTICE: The hand-held programming device can be damaged if not connected properly.

- The hand-held programming device may **only** be connected via pins 1 "AS-Interface +" and 3 "AS-Interface -" with the AS-Interface plug connector.
- Prior to the address assignment via a hand-held programming device, switch S5 in the MOVIMOT® connection box must be set to "1".
- After the address assignment you have to set the S5 according to the kind of 24 V voltage supply.

Example:

Disconnect the AS-Interface nodes from the AS-Interface network **one at a time** and assign addresses via the hand-held programming device (A).

Reconnect the respective AS-Interface node to the AS-Interface network (B).

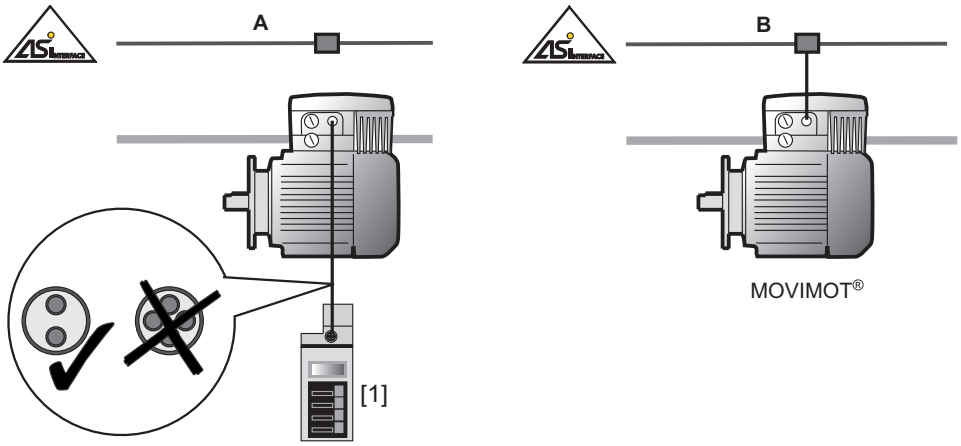

9007200382410891

[1] AS-Interface hand-held programming device

22167811/EN – 04/2016

8.1.2 Setting the 24 V supply via switch S5

The switch S5 [1] is located on the connection board.

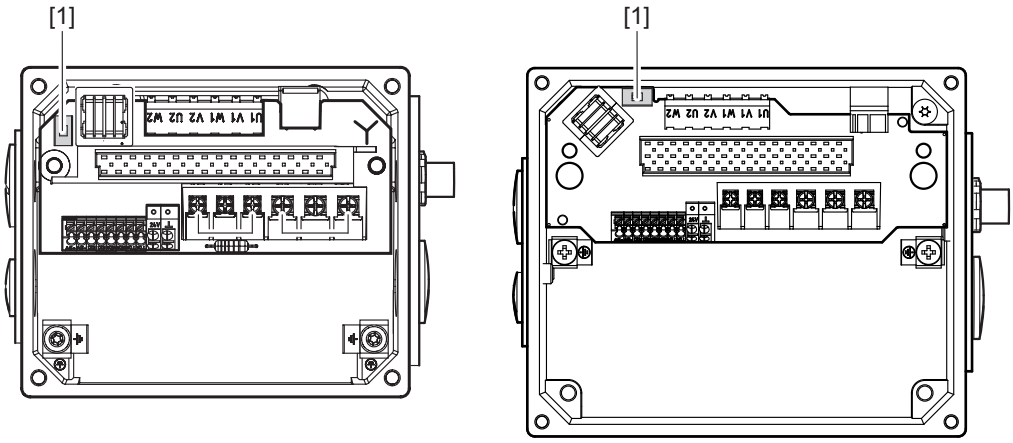

18014399700786699

Size 1 Size 2

[1] Switch S5

Use switch S5 to set the type of 24 V supply.

	24 V voltage supply
Switch S5 = "1" 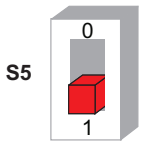 	MOVIMOT® and sensor supply using AUX PWR (e.g. black AS-Interface cable) 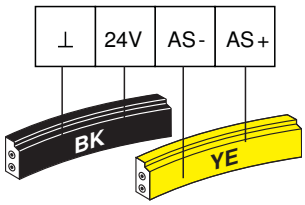
Switch S5 = "0" 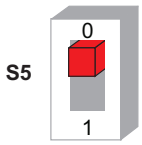 	MOVIMOT® and sensor supply using the AS-Interface data cable. 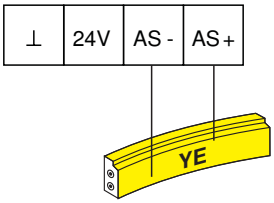

22167811/EN – 04/2016

8.1.3 Data AS-Interface master → MOVIMOT®

The following table shows the 4 data bits that the AS-Interface master sends to the MOVIMOT® inverter via the AS-Interface:

AS-Interface bit	The function is described in chapter "Inverter behavior depending on the AS-Interface bits" (→ 🗎 144).
DO0	CW operation/Stop
DO1	CCW operation/Stop
DO2	Speed f2/speed f1
DO3	Reset[1] /controller enable

1) In the event of an edge change "0" → "1" (only effective in case of an error)

INFORMATION

To enable the drive, AS-Interface bit DO3 "Reset/controller enable" must be set.

8.1.4 MOVIMOT® data → AS-Interface master

The following table shows the 4 data bits that the MOVIMOT® inverter sends to the AS-Interface master via the AS-Interface:

AS-Interface bit	Function
DI0	Ready signal 0: The MOVIMOT® drive is not ready for operation. 1: The MOVIMOT® drive is ready for operation.
DI1	Manual mode 0: MOVIMOT® control via AS-Interface 1: MOVIMOT® control via manual operation
DI2	Sensor input 1 0: Signal of sensor 1 = "0" 1: Signal of sensor 1 = "1"
DI3	Sensor input 2 0: Signal of sensor 2 = "0" 1: Signal of sensor 2 = "1"

22167811/EN – 04/2016

8.1.5 Setpoint scaling via parameter bits

The following table lists the parameter bits for setpoint scaling.

The setpoint scaling does only affect setpoint f1 that can be set externally.

Setpoint f2 and the minimum frequency are not affected by the scaling.

The following table lists the possible setpoint frequencies for setpoint potentiometer f1 = 100 Hz (3000 min^{-1}) and f1 = 50 Hz (1500 min^{-1}):

Parameter bits				Factor	Setpoint frequency [Hz]	
P3	P2	P1	P0		for f1 = 100 Hz	f1 = 50 Hz
1	1	1	1	1.00	100	50
1	1	1	0	1.11	90	45
1	1	0	1	1.25	80	40
1	1	0	0	1.43	70	35
1	0	1	1	1.67	60	30
1	0	1	0	2.00	50	25
1	0	0	1	2.22	45	22.5
1	0	0	0	2.50	40	20
0	1	1	1	2.86	35	17.5
0	1	1	0	3.33	30	15
0	1	0	1	4.00	25	12.5
0	1	0	0	5.00	20	10
0	0	1	1	6.67	15	7.5
0	0	1	0	10.00	10	5
0	0	0	1	14.30	7	3.5
0	0	0	0	20.00	5	2.5

22167811/EN – 04/2016

8.1.6 Inverter behavior depending on the AS-Interface bits

The following table shows the behavior of the MOVIMOT® inverter depending on the status of the AS-Interface bit:

Inverter behavior	Supply system X1: L1-L3	AS-Interface bit				Status LED
		DO3 Reset/ controller enable	DO2 Speed f2/ speed f1	DO0 CW operation/ stop	DO1 CCW operation/ stop	
Inverter off	0	0	x	x	x	Flashing yellow
Inverter off	1	0	x	x	x	Yellow
Stop, no supply system	0	1	x	x	x	Flashing yellow
Stop	1	1	x	0	0	Yellow
CW rotation with f1	1	1	0	1	0	Green
CCW rotation with f1	1	1	0	0	1	Green
CW rotation with f2	1	1	1	1	0	Green
CCW rotation with f2	1	1	1	0	1	Green
Stop	1	1	x	1	1	Yellow

0 = No voltage 1 = Voltage x = Any

8.1.7 Brake release without enable

When switch S2/2 is set to "ON", it is possible to release the brake even if there is no drive enable.

See chapter "DIP switch S2/2" (→ 🗎 75).

This function is only available for brakemotors.

This function is not available in hoist operation.

22167811/EN – 04/2016

9 Startup of MLK31A

INFORMATION

Startup with the MLK31A only makes sense in "Expert" mode.

For the startup with MLK31A, also adhere to chapter "Startup of MOVIMOT® with MLK.. in Expert mode".

9.1 MLK31A double slave – functional description

9.1.1 Operating principle

An AS-Interface master according to the AS-Interface specification 3.0, rev. 2 in conjunction with the M4 master profile is required for controlling the MLK31A double slave.

On delivery, the MLK31A option has address 0 and profile S-7.A.7.7. If you set an address > 0, the MLK31A option turns into a double slave with the profiles S-7.A.7.7 (A-slave) and S-7.A.7.5 (B-slave).

You must not connect more than 31 of those slaves to one AS-Interface branch.

9.1.2 A-slave, meaning of the AS-Interface data and parameter bits

The AS-Interface master transfers data bits and parameter bits to the MLK31A option (A-slave). The MLK31A option forwards 4 data bits and 3 parameter bits without interpretation via RS485 communication to the MOVIMOT® inverter.

The MOVIMOT® inverter contains several function modules (assignment tables) that assign specific drive functions to the data bits. For information on function assignment, refer to chapter "Function modules" (→ 🗎 151).

Parameter bits

- 3 of the acyclic parameter bits (P2 – P0) are used for switching between the individual function modules. These parameter bits determine the meaning of the data bits.
- In the extended address mode, the fourth parameter bit is not available for the user.
- Parameter selection between function modules is also possible during ongoing operation and with enabled MOVIMOT® inverter. The meaning of the data bits might change in this case.
- The parameter input bits are not used.

22167811/EN – 04/2016

Data bits

The following table shows the assignment of the digital input data bits of the A-slave (cycle time: max 10 ms):

Parameter bits (A-slave)		Function of the input data bits (A-slave)			
(P2 P1 $P0_{bin}$)	Function $module_{hex}$	Bit 4 (DI3)	Bit 3 (DI2)	Bit 2 (DI1)	Bit 1 (DI0)
010_{bin} – 111_{bin}	2_{hex} – 7_{hex}	Status Sensor 2	Status Sensor 1	Status of MOVIMOT® according to chapter "Description of the data bits, function modules" (→ 🗎 152)	
000_{bin} – 001_{bin}	0_{hex} – 1_{hex}	Status of MOVIMOT® according to chapter "Description of the data bits, function modules" (→ 🗎 152)			

Parameter bits P2 – P0 are used for selecting the function modules.

- When function modules 2_{hex} – 7_{hex} are selected, data bits DI0 and DI1 are transmitted from the slave to the master according to the MOVIMOT® status word. Data bits DI2 and DI3 contain the state of sensor inputs DI2 and DI3.
- When function modules 0_{hex} – 1_{hex} are selected, all 4 data bits DI0 – DI3 are transmitted from the slave to the master according to the MOVIMOT® status word. The state of the sensor inputs is not transmitted.

9.1.3 Function of the B-slave

The B-slave is used to transmit various status and control words between AS-Interface master and MOVIMOT® inverter.

The serial AS-Interface data transmission allows for MOVIMOT® parameters and display values to be written and read.

- According to profile S-7.A.F.5, the AS-Interface master acyclically transfers several data bytes to the MLK31A option (B-slave).
- The microcontroller of the MLK31A option processes those signals and transfers them via the to the RS485 interface of the MOVIMOT® according to the MOVILINK® protocol (parameter telegram).
- The MOVIMOT® inverter transfers the response telegram to the MLK31A option via the RS485 interface.
- The MLK31A option converts the response telegram and transfers it to the AS-Interface master via the serial AS-Interface connection.

For communication via the RS485 interface, the acyclical parameter transfer of the B-slave has a higher priority than the cyclical control word of the A-slave. Due to the cycle time on the AS-Interface, at least one process data protocol is performed between the parameter transfer.

Communication via the B-slave is always performed acyclically. Parameter transfer via the internal RS485 interface requires a corresponding parameter call of the AS-Interface master in conjunction with a higher-level controller.

22167811/EN – 04/2016

9.2 Startup procedure

⚠ WARNING

Electric shock from capacitors that have not been fully discharged.

Severe or fatal injuries.

- Disconnect the inverter from the power. Observe the minimum switch-off time after disconnection from the supply system:
  - **1 minute**

1. Remove the MOVIMOT® inverter from the connection box.
2. Set the required AS-Interface address:
   - ⇨ With a hand-held programming device (→ 🗎 149)
   - ⇨ or with a master (see description of the AS-Interface master)
3. Check the connection of the MOVIMOT® inverter.
   - ⇨ See chapter "Electrical Installation".
4. Set the type of 24 V supply via the switch S5 (→ 🗎 150).
5. Set DIP switches S1/1 – S1/4 as follows:

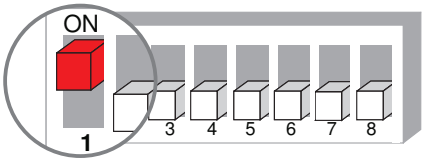

9007199592524939

6. Place the MOVIMOT® inverter onto the connection box and screw it on tightly.
7. Switch on the following voltages:
   - ⇨ AS-Interface voltage
   - ⇨ DC 24 V auxiliary voltage (only for 24 V supply via the black AUX PWR cable)
   - ⇨ Line voltage

22167811/EN – 04/2016

9.2.1 Assigning the slave address

An AS-Interface master according to the AS-Interface specification 3.0, rev. 2 in conjunction with the M4 master profile is required for controlling the MLK31A double slave.

MOVIMOT® drives with MLK3.A AS-Interface option are set to address 0 and profile S-7.A.7.7 by default. If you set an address > 0, the MLK31A option turns into a double slave with profiles S-7.A.7.7 (A slave) and S-7.A.F.5 (B slave). After the address assignment, the B slave automatically assumes the base address of the A slave.

You have the following options for assigning the AS-Interface address of the MOVIMOT® drive with AS-Interface option MLK3.A (address 1 - 31):

- Addresses are assigned automatically within a configured AS-Interface system when replacing a MOVIMOT® drive with MLK31A AS-Interface option.

  The following prerequisites must be fulfilled:

  – The new MOVIMOT® drive with AS-Interface option MLK31A must have the address 0.

  – If you need to replace several MOVIMOT® drives with AS-Interface option MLK31A, you must replace them individually (one after the other).

- Manual address assignment via the system master

  The drives must be connected to the AS-Interface cable one after another. Doing so prevents several MOVIMOT® drives with AS-Interface option MLK31A from being assigned the same address.

- Manual address assignment using a hand-held AS-Interface programming device.

  Observe the notes in the next chapter when connecting the MOVIMOT® drive with AS-Interface option MLK31A to the AS-Interface cable.

INFORMATION

Observe the following notes if you change the AS-Interface address of the MLK31A AS-Interface option after the corresponding address assignment (address > 0):

- The new address must not be used by another projected slave.
- The B slave must always have the same base address as the A slave.
- Only the address of the A slave must be set for the address assignment.
- After the address assignment, the B slave automatically assumes the base address of the A slave.

22167811/EN – 04/2016

Assigning the slave address using a hand-held programming device

Hand-held AS-Interface programming devices offer the following functions:

- Reading and changing an AS-Interface slave address
- Reading off the AS-Interface profile
- Reading and changing the data and parameter bits
- Function check and test run.

  Hand-held programming devices do not provide sufficient current for the operation. This is why an external voltage supply (AUX-PWR) is required for the function check and the test run.

When using a hand-held programming device, you need a **2-core** connection cable that fits onto the AS-Interface plug connector on MOVIMOT® (see the following figure).

1: AS-Interface +
2: 0V24 [1]
3: AS-Interface -
4: 24V [1]

1127256715

[1] Do not connect pin 2 and 4 for the address assignment!

NOTICE: The hand-held programming device can be damaged if not connected properly.

- The hand-held programming device may **only** be connected via pins 1 "AS-Interface +" and 3 "AS-Interface -" with the AS-Interface plug connector.
- Prior to the address assignment via a hand-held programming device, switch S5 in the MOVIMOT® connection box must be set to "1".
- After the address assignment you have to set the S5 according to the kind of 24 V voltage supply.

Example:

Disconnect the AS-Interface nodes from the AS-Interface network **one at a time** and assign addresses via the hand-held programming device (A).

Reconnect the respective AS-Interface node to the AS-Interface network (B).

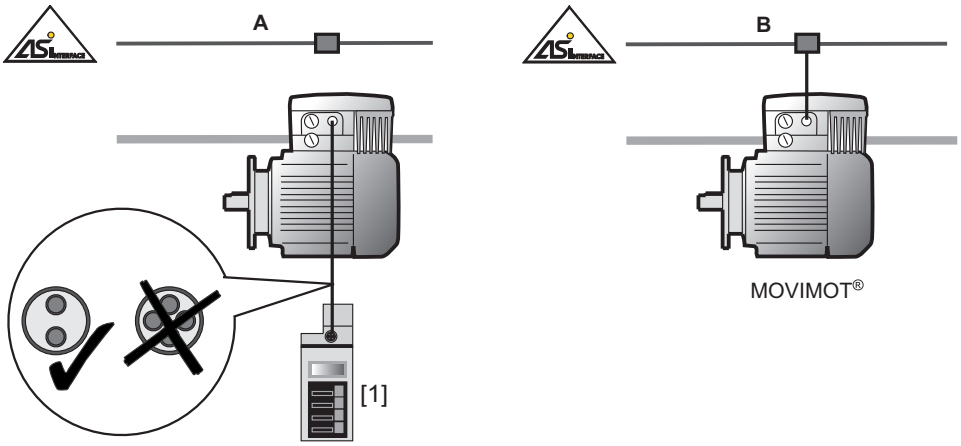

9007200382410891

[1] AS-Interface hand-held programming device

22167811/EN – 04/2016

9.2.2 Setting the 24 V supply via switch S5

The switch S5 [1] is located on the connection board.

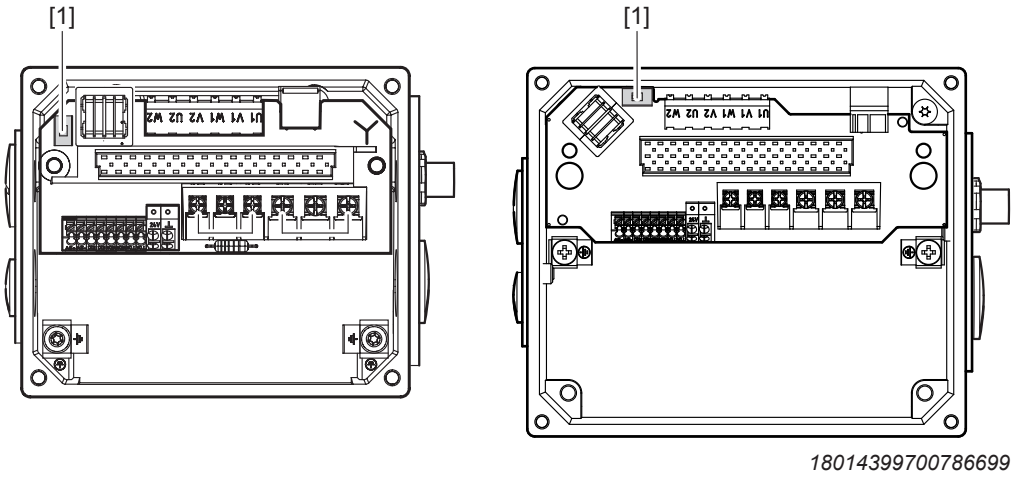

Size 1 Size 2

[1] Switch S5

Use switch S5 to set the type of 24 V supply.

	24 V voltage supply
Switch S5 = "1" S5 0 1	MOVIMOT® and sensor supply using AUX PWR (e.g. black AS-Interface cable) ⊥ 24V AS- AS+ BK YE
Switch S5 = "0" S5 0 1	MOVIMOT® and sensor supply using the AS-Interface data cable. ⊥ 24V AS- AS+ YE

22167811/EN – 04/2016

9.3 Function modules

The drive-specific function assignment of the cyclic data bits is carried out in the MOVIMOT® inverter. This chapter describes this function assignment.

The AS-Interface parameter bits P2 – P0 are used for switching between the drive functions. These parameters determine the meaning of the data bits. It is also possible to switch between the function modules during operation and with enabled MOVIMOT® inverter. The meaning of the data bits might change in this case.

9.3.1 Descriptions of the parameter bits

The following table shows the function assignment of the data bits to the selected function module (AS-Interface parameter bits).

AS-Interface parameter bits		Function of the data bits
(P2 P1 $P0_{bin}$)	**Function $module_{hex}$**	
111_{bin}	7_{hex}	Binary mode (default), control compatible with SEW binary slave
110_{bin}	6_{hex}	Reserved
101_{bin}	5_{hex}	6 fixed setpoints with the ramps t11 up and t11 down Status messages Ramp switchover between the function modules 4_{hex} and 5_{hex}
100_{bin}	4_{hex}	6 fixed setpoints with the ramps t15 up and t15 down Status messages Ramp switchover between the function modules 5_{hex} and 4_{hex}
011_{bin}	3_{hex}	3 fixed setpoints with the ramps t11 up and t11 down 3 fixed setpoints with the ramps t15 up and t15 down
010_{bin}	2_{hex}	Reserved
001_{bin}	1_{hex}	6 fixed setpoints with the ramps t11 up and t11 down Extended fault diagnosis No sensor inputs
000_{bin}	0_{hex}	Reserved

- When function modules 2_{hex} – 7_{hex} are selected, data bits DI0 and DI1 are transmitted from the slave to the master according to the MOVIMOT® status word. Data bits DI2 and DI3 contain the state of sensor inputs DI2 and DI3.
- When function modules 0_{hex} – 1_{hex} are selected, all 4 data bits DI0 – DI3 are transmitted from the slave to the master according to the MOVIMOT® status word. The state of the sensor inputs is not transmitted.

If the AS-Interface master selects the parameter bits with a reserved function, the MOVIMOT® drive changes to "Stop".

22167811/EN – 04/2016

9.3.2 Description of the data bits, function modules

Function module 7_{hex}

The cyclic operation with the function module 7_{hex} represents a function compatible with the SEW binary slave (without scaling function).

The MLK3.A option is like an I/O module with 4 input and 4 output data bits.

The MOVIMOT® drive is controlled via output data bits.

Output data AS-Interface master → MLK3.A option

Function module 7_{hex} (AS-interface parameter bits = 111_{bin})	
Data bit	**Function**
DO0	CW operation/Stop
DO1	CCW operation/Stop
DO2	Setpoint changeover f1/f2
DO3	Reset[1)] /controller enable

1) In the event of an edge change "0" → "1" (only effective in case of an error)

Input data MLK31A option → AS-Interface master

Function module 7_{hex} (AS-interface parameter bits = 111_{bin})	
Data bit	**Function**
DI0	Ready signal 0: MOVIMOT® is not ready. 1: MOVIMOT® is ready.
DI1	Manual mode 0: MOVIMOT® control via AS-Interface. 1: MOVIMOT® control via manual mode.
DI2	Sensor input 1 0: Signal of sensor 1 = "0". 1: Signal of sensor 1 = "1".
DI3	Sensor input 2 0: Signal of sensor 2 = "0". 1: Signal of sensor 2 = "1".

22167811/EN – 04/2016

Function module 5_{hex}

The cyclic operation with function module 5_{hex} allows for selecting 6 fixed setpoints with ramps t11 up and t11 down.

The output data bits are binary coded and interpreted as 16 different control codes.

The output and input data bits are assigned the following functions:

Output data AS-Interface master → MLK3.A option

Function module 5_{hex} (AS-interface parameter bits = 101_{bin})				
Data bit		**Function**		
bin.	**dec.**			
0000_{bin}	0_{dec}	Stop		Stop ramp t13 (*P136*)
0001_{bin}	1_{dec}	Stop/inhibit		Ramp t11 down (*P131)*
0010_{bin}	2_{dec}	CW operation,	Fixed setpoint n0 (*P170*)	Ramp t11 up (*P130)*, t11 down (*P131)*
0011_{bin}	3_{dec}	CCW operation,	Fixed setpoint n0 (*P170*)	Ramp t11 up (*P130)*, t11 down (*P131)*
0100_{bin}	4_{dec}	CW operation,	Fixed setpoint n1 (*P171*)	Ramp t11 up (*P130)*, t11 down (*P131)*
0101_{bin}	5_{dec}	CCW operation,	Fixed setpoint n1 (*P171*)	Ramp t11 up (*P130)*, t11 down (*P131)*
0110_{bin}	6_{dec}	CW operation,	Fixed setpoint n2 (*P172*)	Ramp t11 up (*P130)*, t11 down (*P131)*
0111_{bin}	7_{dec}	CCW operation,	Fixed setpoint n2 (*P172*)	Ramp t11 up (*P130)*, t11 down (*P131)*
1000_{bin}	8_{dec}	CW operation,	Fixed setpoint n3 (*P173*)	Ramp t11 up (*P130)*, t11 down (*P131)*
1001_{bin}	9_{dec}	CCW operation,	Fixed setpoint n3 (*P173*)	Ramp t11 up (*P130)*, t11 down (*P131)*
1010_{bin}	10_{dec}	CW operation,	Fixed setpoint n4 (*10096.38*)	Ramp t11 up (*P130)*, t11 down (*P131)*
1011_{bin}	11_{dec}	CCW operation,	Fixed setpoint n4 (*10096.38*)	Ramp t11 up (*P130)*, t11 down (*P131)*
1100_{bin}	12_{dec}	CW operation,	Fixed setpoint n5 (*10096.39*)	Ramp t11 up (*P130)*, t11 down (*P131)*
1101_{bin}	13_{dec}	CCW operation,	Fixed setpoint n5 (*10096.39*)	Ramp t11 up (*P130)*, t11 down (*P131)*
1110_{bin}	14_{dec}	Brake release without drive enable (only if DIP switch S2/1 = "ON" or parameter *P738* = "ON")		
1111_{bin}	15_{dec}	Stop Reset (only effective in case of an error)		Stop ramp t13 (*P136*)

22167811/EN – 04/2016

input data MLK31A option → AS-Interface master

Function module 5_{hex} (AS-interface parameter bits = 101_{bin})	
Data bit	**Function**
DI0	Ready signal 0: MOVIMOT® is not ready. 1: MOVIMOT® is ready.
DI1	Enable 0: Motor is not energized. 1: Motor is energized.
DI2	Sensor input 1 0: Signal of sensor 1 = "0". 1: Signal of sensor 1 = "1".
DI3	Sensor input 2 0: Signal of sensor 2 = "0". 1: Signal of sensor 2 = "1".

22167811/EN – 04/2016

Function module 4_{hex}

The cyclic operation with function module 4_{hex} allows for selecting 6 fixed setpoints with ramps t15 up and t15 down.

This operation is identical to the operation with function module 5_{hex}, however, ramps t15 up and t15 down are used.

This means switching between function modules 4_{hex} and 5_{hex} realizes a switching between the ramps during operation. This ramp switchover can be used for a load-dependent optimization of the application.

The output and input data bits are assigned the following functions:

Output data AS-Interface master → MLK3.A option

Function module 4_{hex} (AS-interface parameter bits = 100_{bin})				
Data bit		**Function**		
bin.	**dec.**			
0000_{bin}	0_{dec}	Stop		Stop ramp t13 (*P136*)
0001_{bin}	1_{dec}	Stop/inhibit		Ramp t15 down (*10504.11*)
0010_{bin}	2_{dec}	CW operation,	Fixed setpoint n0 (*P170*)	Ramps t15 up (*10504.1*), t15 down (*10504.11*)
0011_{bin}	3_{dec}	CCW operation,	Fixed setpoint n0 (*P170*)	Ramps t15 up (*10504.1*), t15 down (*10504.11*)
0100_{bin}	4_{dec}	CW operation,	Fixed setpoint n1 (*P171*)	Ramps t15 up (*10504.1*), t15 down (*10504.11*)
0101_{bin}	5_{dec}	CCW operation,	Fixed setpoint n1 (*P171*)	Ramps t15 up (*10504.1*), t15 down (*10504.11*)
0110_{bin}	6_{dec}	CW operation,	Fixed setpoint n2 (*P172*)	Ramps t15 up (*10504.1*), t15 down (*10504.11*)
0111_{bin}	7_{dec}	CCW operation,	Fixed setpoint n2 (*P172*)	Ramps t15 up (*10504.1*), t15 down (*10504.11*)
1000_{bin}	8_{dec}	CW operation,	Fixed setpoint n3 (*P173*)	Ramps t15 up (*10504.1*), t15 down (*10504.11*)
1001_{bin}	9_{dec}	CCW operation,	Fixed setpoint n3 (*P173*)	Ramps t15 up (*10504.1*), t15 down (*10504.11*)
1010_{bin}	10_{dec}	CW operation,	Fixed setpoint n4 (*10096.38*)	Ramps t15 up (*10504.1*), t15 down (*10504.11*)
1011_{bin}	11_{dec}	CCW operation,	Fixed setpoint n4 (*10096.38*)	Ramps t15 up (*10504.1*), t15 down (*10504.11*)
1100_{bin}	12_{dec}	CW operation,	Fixed setpoint n5 (*10096.39*)	Ramps t15 up (*10504.1*), t15 down (*10504.11*)
1101_{bin}	13_{dec}	CCW operation,	Fixed setpoint n5 (*10096.39*)	Ramps t15 up (*10504.1*), t15 down (*10504.11*)
1110_{bin}	14_{dec}	Brake release without drive enable (only if DIP switch S2/1 = "ON" or parameter *P738* = "ON")		
1111_{bin}	15_{dec}	Stop Reset (only effective in case of an error)		Stop ramp t13 (*P136*)

22167811/EN – 04/2016

input data MLK31A option → AS-Interface master

Function module 4_{hex} (AS-interface parameter bits = 100_{bin})	
Data bit	**Function**
DI0	Ready signal 0: MOVIMOT® is not ready. 1: MOVIMOT® is ready.
DI1	Enable 0: Motor is not energized. 1: Motor is energized.
DI2	Sensor input 1 0: Signal of sensor 1 = "0". 1: Signal of sensor 1 = "1".
DI3	Sensor input 2 0: Signal of sensor 2 = "0". 1: Signal of sensor 2 = "1".

22167811/EN – 04/2016

Function module 3_{hex}

The cyclic operation with function module 3_{hex} allows for selecting 3 fixed setpoints with ramps t16 up and t16 down as well as 3 fixed setpoints with ramps t15 up and t15 down.

The output data bits are binary coded and interpreted as 16 different control codes.

The output and input data bits are assigned the following functions:

Output data AS-Interface master → MLK3.A option

Function module 3_{hex} (AS-interface parameter bits = 011_{bin})				
Data bit		**Function**		
bin.	**dec.**			
0000_{bin}	0_{dec}	Stop		Stop ramp t13 (*P136*)
0001_{bin}	1_{dec}	Stop/inhibit		Ramp t16 down (*10475.1*)
0010_{bin}	2_{dec}	CW operation,	Fixed setpoint n0 (*P170*)	Ramps t16 up (*10475.2*), t16 down (*10475.1*)
0011_{bin}	3_{dec}	CCW operation,	Fixed setpoint n0 (*P170*)	Ramps t16 up (*10475.2*), t16 down (*10475.1*)
0100_{bin}	4_{dec}	CW operation,	Fixed setpoint n1 (*P171*)	Ramps t16 up (*10475.2*), t16 down (*10475.1*)
0101_{bin}	5_{dec}	CCW operation,	Fixed setpoint n1 (*P171*)	Ramps t16 up (*10475.2*), t16 down (*10475.1*)
0110_{bin}	6_{dec}	CW operation,	Fixed setpoint n2 (*P172*)	Ramps t16 up (*10475.2*), t16 down (*10475.1*)
0111_{bin}	7_{dec}	CCW operation,	Fixed setpoint n2 (*P172*)	Ramps t16 up (*10475.2*), t16 down (*10475.1*)
1000_{bin}	8_{dec}	CW operation,	Fixed setpoint n3 (*P173*)	Ramps t15 up (*10504.1*), t15 down (*10504.11*)
1001_{bin}	9_{dec}	CCW operation,	Fixed setpoint n3 (*P173*)	Ramps t15 up (*10504.1*), t15 down (*10504.11*)
1010_{bin}	10_{dec}	CW operation,	Fixed setpoint n4 (*10096.38*)	Ramps t15 up (*10504.1*), t15 down (*10504.11*)
1011_{bin}	11_{dec}	CCW operation,	Fixed setpoint n4 (*10096.38*)	Ramps t15 up (*10504.1*), t15 down (*10504.11*)
1100_{bin}	12_{dec}	CW operation,	Fixed setpoint n5 (*10096.39*)	Ramps t15 up (*10504.1*), t15 down (*10504.11*)
1101_{bin}	13_{dec}	CCW operation,	Fixed setpoint n5 (*10096.39*)	Ramps t15 up (*10504.1*), t15 down (*10504.11*)
1110_{bin}	14_{dec}	Stop/inhibit		Ramp t15 down (*10504.11*)
1111_{bin}	15_{dec}	Stop Reset (only effective in case of an error)		Stop ramp t13 (*P136*)

22167811/EN – 04/2016

Input data MLK31A option → AS-Interface master

Function module 3_{hex} (AS-interface parameter bits = 011_{bin})	
Data bit	**Function**
DI0	Ready signal 0: MOVIMOT® is not ready. 1: MOVIMOT® is ready.
DI1	Enable 0: Motor is not energized. 1: Motor is energized.
DI2	Sensor input 1 0: Signal of sensor 1 = "0". 1: Signal of sensor 1 = "1".
DI3	Sensor input 2 0: Signal of sensor 2 = "0". 1: Signal of sensor 2 = "1".

22167811/EN – 04/2016

Function module 1_{hex}

Cyclic operation with function module 1_{hex} allows for selecting 6 fixed setpoints and for extended fault diagnosis.

The output data during the operation with function module 1_{hex} correspond to the output data during operation with function module 5_{hex}. The input data during operation with function module 1_{hex} are interpreted as different status codes.

Output data AS-Interface master → MLK3.A option

Function module 1_{hex} (AS-interface parameter bits = 001_{bin})				
Data bit		**Function**		
bin.	**dec.**			
0000_{bin}	0_{dec}	Stop		Stop ramp t13 (*P136*)
0001_{bin}	1_{dec}	Stop/inhibit		Ramp t11 down (*P131)*
0010_{bin}	2_{dec}	CW operation,	Fixed setpoint n0 (*P170*)	Ramp t11 up (*P130)*, t11 down (*P131)*
0011_{bin}	3_{dec}	CCW operation,	Fixed setpoint n0 (*P170*)	Ramp t11 up (*P130)*, t11 down (*P131)*
0100_{bin}	4_{dec}	CW operation,	Fixed setpoint n1 (*P171*)	Ramp t11 up (*P130)*, t11 down (*P131)*
0101_{bin}	5_{dec}	CCW operation,	Fixed setpoint n1 (*P171*)	Ramp t11 up (*P130)*, t11 down (*P131)*
0110_{bin}	6_{dec}	CW operation,	Fixed setpoint n2 (*P172*)	Ramp t11 up (*P130)*, t11 down (*P131)*
0111_{bin}	7_{dec}	CCW operation,	Fixed setpoint n2 (*P172*)	Ramp t11 up (*P130)*, t11 down (*P131)*
1000_{bin}	8_{dec}	CW operation,	Fixed setpoint n3 (*P173*)	Ramp t11 up (*P130)*, t11 down (*P131)*
1001_{bin}	9_{dec}	CCW operation,	Fixed setpoint n3 (*P173*)	Ramp t11 up (*P130)*, t11 down (*P131)*
1010_{bin}	10_{dec}	CW operation,	Fixed setpoint n4 (*10096.38*)	Ramp t11 up (*P130)*, t11 down (*P131)*
1011_{bin}	11_{dec}	CCW operation,	Fixed setpoint n4 (*10096.38*)	Ramp t11 up (*P130)*, t11 down (*P131)*
1100_{bin}	12_{dec}	CW operation,	Fixed setpoint n5 (*10096.39*)	Ramp t11 up (*P130)*, t11 down (*P131)*
1101_{bin}	13_{dec}	CCW operation,	Fixed setpoint n5 (*10096.39*)	Ramp t11 up (*P130)*, t11 down (*P131)*
1110_{bin}	14_{dec}	Brake release without drive enable (only if DIP switch S2/1 = "ON" or parameter *P738* = "ON")		
1111_{bin}	15_{dec}	Stop Reset (only effective in case of an error)		Stop ramp t13 (*P136*)

22167811/EN – 04/2016

input data MLK31A option → AS-Interface master

Function module 1_{hex} (AS-interface parameter bits = 001_{bin})			
Data bit		**Function**	
bin.	**dec.**		
0000_{bin}	0_{dec}	Not ready	
0001_{bin}	1_{dec}	Ready for operation – automatic mode	
0010_{bin}	2_{dec}	Ready for operation – manual mode	
0011_{bin}	3_{dec}	Enable/motor running – automatic mode	
0100_{bin}	4_{dec}	Enable/motor running – manual mode	
0101_{bin}	5_{dec}	Reserved	
0110_{bin}	6_{dec}	Reserved	
0111_{bin}	7_{dec}	Reserved	
1000_{bin}	8_{dec}	Error, DC link voltage too high	Error code 07
1001_{bin}	9_{dec}	Phase failure error	Error code 06
1010_{bin}	10_{dec}	Error, overcurrent output stage	Error code 01
1011_{bin}	11_{dec}	Error, thermal overload output stage	Error code 11
1100_{bin}	12_{dec}	Error, thermal overload motor	Error code 84
1101_{bin}	13_{dec}	Error, thermal overload brake coil	Error code 89
1110_{bin}	14_{dec}	Speed monitoring error	Error code 08
1111_{bin}	15_{dec}	Other error	

22167811/EN – 04/2016

9.4 Transferring individual parameters via AS-Interface

9.4.1 MOVILINK® parameter channel

The MOVILINK® parameter channel affords access to all drive parameters of the MOVIMOT® inverter, irrespective of the bus. It is also used for parameter access of the AS-Interface master to the MOVIMOT® inverter via the MLK31A AS-Interface slave. The following figure shows the structure of the MOVILINK® parameter channel:

Byte 0	Byte 1	Byte 2	Byte 3	Byte 4	Byte 5	Byte 6	Byte 7
Admin.	Subindex	Index High	Index Low	Data MSB	Data	Data	Data LSB

1961055627

The request and response frames of the MOVILINK® parameter channel have the same structure.

Management byte

Management byte 0 coordinates the parameterization process. It provides important service parameters of the executed service.

Management byte 0		
Bit	**Meaning**	**Value**
0 – 3	Service executed	0000_{bin}: No service 0001_{bin}: Read parameter 0010_{bin}: Write parameter 0011_{bin}: Write parameter volatile 0110_{bin}: Read default All other services are not used for MOVIMOT® with MLK31A option.
4 – 5	Length of data/error bytes	11_{bin}: 4 bytes
6	Handshake bit	0: Not used for MOVIMOT® with the MLK31A option
7	Status bit	0: No error during execution of service 1: Error while executing service, see bytes 4 – 7

- Bits 0 – 3 specify the service to be executed.
- Bits 4 and 5 specify the data length of the write service.
- Handshake bit 6 is used as an acknowledgement bit for cyclic transmission. This bit is not used for the parameter transmission with the MLK31A option.
- Status bit 7 indicates whether the service was carried out properly or whether errors occurred.

Index addressing

Byte 1/subindex, byte 2/index High, and byte 3/index Low determine the parameter to be read via the parameter channel. The parameters of the inverter are addressed using the same index in all communication interfaces.

22167811/EN – 04/2016

Data range

The data is located in bytes 4 – 7 of the MOVILINK® parameter channel. This means a maximum of 4 bytes per service can be transmitted across the parameter channel. The data is always right-justified. This means byte 7 contains the least significant data byte (LSB data) whereas byte 4 is the most significant data byte (MSB data).

Incorrect execution of a service

If an error occurs during service execution, status bit 7 in the management byte will be set to "1".

If status bit 7 signals an error, the structured error code is send back to the data range (byte 4 – 7) of the response telegram.

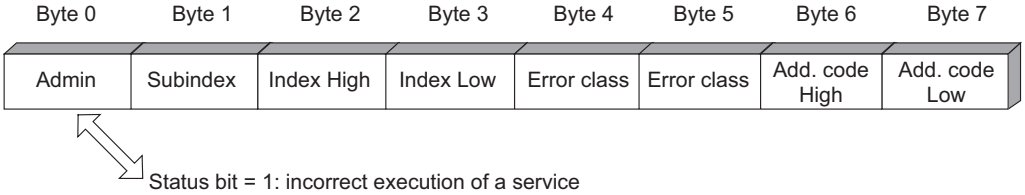

2048785547

The following table shows the values and their meaning for the elements "Error class", "Error code", "Additional code High" and "Additional code Low":

Element	Value	Meaning/notes
Error class	0x08	Error type according to EN 50170 For MOVIMOT® with MLK31A, the error class is = 0x08.
Error code	0x0	Error code For MOVIMOT® with MLK31A, the error code is = 0x00.
Additional code High	0x0	For MOVIMOT® with MLK31A, the additional code Low is = 0x00.
Additional code Low	0x00/0	No error
	0x10/16	Illegal index
	0x11/17	Function / parameter not implemented
	0x12/18	Read access only
	0x13/19	Parameter lock activated
	0x15/21	Parameter value too high
	0x16/22	Parameter value too small
	0x1B/27	Parameter protected against access
	0x1C/28	Controller inhibit required to change the parameter.
	0x1D/29	Invalid parameter value

22167811/EN – 04/2016

9.4.2 CTT2 protocol via AS-Interface

You can use the MLK31A double slave to exchange MOVILINK® parameters between an AS-Interface master and a MOVIMOT® inverter.

The B-slave with slave profile S-7.A.F.5 uses the CTT2 protocol. For a description of the profile, refer to the appendix of the "Complete AS-Interface Specification Version 3.0, Revision 2, July 9, 2008".

Transfer time for a parameter

System-related transfer times for parameters occur during data exchange between the MOVIMOT® B-slave and the AS-Interface master using the CTT2 protocol. These transfer times for parameters mainly depend on the number of slaves in the AS-Interface network.

The following diagram shows the connection between the transfer time for a MOVILINK® parameter and the number of AS-Interface slave addresses:

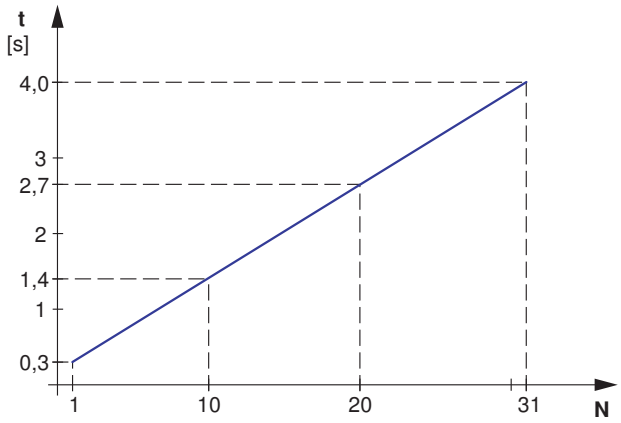

2218581131

t Transfer time for a parameter
N Number of AS-Interface addresses

SEW-EURODRIVE therefore recommends to add a safety factor to those values.

Controlling the MOVIMOT® inverter via the cyclic data bits of the A-slave continues even during the transfer of parameters of the B-slave.

22167811/EN – 04/2016

CTT2 services

The MLK31A double slave supports the following acyclic services and the corresponding response telegrams of the CTT2 protocol:

Code		Service/ response telegram	Followed by	Recommended use
hex	dec.			
$0x10_{hex}$	16_{dec}	Read request	Index, length	Reading out: • Index "$0x00_{hex}$" = "ID object" • Index "$0x01_{hex}$" = "diagnostics"
$0x50_{hex}$	80_{dec}	Read response OK	LSB	
$0x90_{hex}$	144_{dec}	Read response not OK	Standard error code	
$0x11_{hex}$	17_{dec}	Write request	Index, length, data	
$0x51_{hex}$	81_{dec}	Write response OK	–	
$0x91_{hex}$	145_{dec}	Write response not OK	Standard error code	
$0x1D_{hex}$	29_{dec}	Exchange request	Index Length when reading Length when writing Read data Write data	Parameterization MOVIMOT® inverter • Index "$0x02_{hex}$" = "MOVILINK parameter channel"
$0x5D_{hex}$	93_{dec}	Exchange response OK	Read data	
$0x9D_{hex}$	157_{dec}	Exchange response not OK	Error object	

In order to check the communication between the AS-Interface master and the AS-Interface slave, SEW-EURODRIVE recommends to read out the "ID object" with the "Read request" service.

The indexes $0x00_{hex}$ "ID object" and $0x01_{hex}$ "diagnostics" are only permitted in conjunction with the CTT2 service "Read request" $0x10_{hex}$.

For parameterization of the MOVIMOT® inverter, use the "Exchange request" service.

Alternatively you can use the "Write request" and "Read request" services for parameterization. However, you have to program fixed wait times when programming the higher-level controller to compensate for transfer times for parameters.

The following chapters describe the individual CTT2 services.

A prerequisite for the transfer of MOVIMOT® parameters using CTT2 services is a basic knowledge of the CTT2 and MOVILINK® protocols.

22167811/EN – 04/2016

Reading out an ID object

In order to check the flawless communication between AS-Interface master and the MLK31A option, read out the ID object with the "Read request" service.

Select index $0x00_{hex}$ and length $0x06_{hex}$.

- If this service is transmitted to the double slave correctly, the MLK31A double slave replies with the response telegram $0x50_{hex}$ "Read response OK" and the data.
- In the event of an error, the MLK31A double slave sends the response telegram $0x90_{hex}$ "Read response not OK" (for the error code, refer to the AS-Interface specification).

"Read request" service:

CTT2 service		
Code	Index	Length
0x10	0x00	0x06

Code 0x10 =	Read request
Index 0x00 =	ID object
Length 0X06 =	Length of the ID object

The slave replies after the system-related transfer time for the parameter.

"Read response OK" response telegram:

CTT2 service						
Code	Vendor ID High	Vendor ID Low	Device ID High	Device ID Low	Output/ input	Firmware version
0x50	0x00	0x0A	0x00	0x0A	0x00	0x01

Code 0x50 =	Read response OK
Vendor ID High 0x00 =	High value of the vendor ID
Vendor ID Low 0x0A =	Low value of the vendor ID
	=> Vendor ID = $0x000A_{hex} = 10_{dec}$
Device ID High 0x00 =	High value of the device ID
Device ID Low 0x0A =	Low value of the device ID
	=> Device ID = $0x000A_{hex} = 10_{dec}$
Output/input 0x00 =	No inputs and outputs
Firmware version 0x01	

22167811/EN – 04/2016

MOVILINK® parameter exchange with "Exchange request"

Executing the CTT2 service "Exchange request" 0x1D, the AS-Interface master sends a telegram with the MOVIMOT® parameter data to the double slave and receives the response data immediately with the response telegram.

Select index $0x02_{hex}$ and length $0x08_{hex}$.

- If this service has been executed correctly, the MLK31A double slave sends the response telegram $0x5D_{hex}$ "Exchange response OK" and the read data.
- If errors occur, the MLK31A double slave sends the response telegram $0x9D_{hex}$ "Exchange response not OK" (for the error code, refer to the AS-Interface specification).
- If the response data of the MOVIMOT® inverter are not available yet, the MLK31A double slave sends a response with error code "Busy" = "4" after the read access.

Example:

Changing the fixed setpoint value n4 (*10096.38*) to 1000 min-1:

"Exchange request" service:

CTT2 service				MOVILINK® protocol							
Code	Index	Read length	Write length	Man-age-ment	Sub-index	High index	Low index	MSB data	Data	Data	LSB data
0x1D	0x02	0x08	0x08	0x32	0x26	0x27	0x70	0x00	0x0F	0x42	0x40

Code 0x1D =	Exchange request
Index 0x02 =	MOVILINK® parameter service
Read length 0x08 =	Length of the MOVILINK® response
Write length 0x08 =	Length of the MOVILINK® request
Management 0x32 =	Write parameter
Subindex 0x26 =	Subindex of parameter fixed setpoint n4 (10096.38) 38_{dec} = 0x26
High index 0x27 =	High value of the index
Low index 0x70 =	Low value of the index
	=> Index of the parameter = $0x2770_{hex}$ = 10096_{dec}
	The value $0x2770_{hex}$ is written to the bytes high index and low index.
Data MSB 0x00	The internal scaling of the MOVIMOT® inverter is 1000 times higher than the real scaling.
Data 0x0F	
Data 0x42	The scaling factor then is 1 000 000_{dec} = 0xF4240.
Data LSB 0x40	This value is written to the 4 data bytes.

The slave replies after the system-related transmission times for parameters.

"Exchange response OK" response telegram

CTT2 service	MOVILINK® protocol							
Code	Man-age-ment	Sub-index	High index	Low index	MSB data	Data	Data	LSB data
0x5D	0x32	0x26	0x27	0x70	0x00	0x00	0x00	0x00

22167811/EN – 04/2016

Code 0x5D =	Exchange request OK
Management 0x32 =	Write parameter
Subindex 0x26 =	Subindex of parameter fixed setpoint n4 (10096.38) 38_{hex} = 0x26
High index 0x27 =	High value of the index
Low index 0x70 =	Low value of the index
	=> Index of the parameter = $0x2770_{hex}$ = 10096_{dec}
	The value $0x2770_{hex}$ is written to the bytes high index and low index.
Data MSB 0x00	If the MOVILINK® service has been executed correctly, the data value is 0_{dec} = 0x0
Data 0x00	
Data 0x00	
Data LSB 0x00	

22167811/EN – 04/2016

MOVILINK® parameter exchange with "Write request" and "Read request"

For the MOVILINK® parameter exchange, you can also use the "Write request" and "Read request" services instead of the recommended "Exchange request" service.

"Write request"

Execute the CTT2 service $0x11_{hex}$ "Write request" to read and write a MOVIMOT® parameter. Select index $0x02_{hex}$.

Select length $0x08_{hex}$. This is the length of a MOVILINK® frame in bytes.

- If this service is transmitted to the double slave correctly, the MLK31A double slave replies with the response telegram $0x51_{hex}$ "Read response OK".
- If an error occurs or if an incorrect index or length have been selected, the MLK31A double slave sends the response telegram $0x91_{hex}$ "Write response not OK" instead. For the error code, refer to the AS-Interface specification.

Example:

Changing the fixed setpoint value n4 (*10096.38*) to 1000 min^{-1}: "Write request" service:

CTT2 service			MOVILINK® protocol							
Code	Index	Length	Management	Subindex	High index	Low index	MSB data	Data	Data	LSB data
0x11	0x02	0x08	0x32	0x26	0x27	0x70	0x00	0x0F	0x42	0x40

Code 0x11 =	Write request
Index 0x02 =	MOVILINK® parameter service
Length 0x08 =	Length of the MOVILINK® protocol
Management 0x32 =	Write parameter
Subindex 0x26 =	Subindex of parameter fixed setpoint n4 (10096.38) 38_{dec} = 0x26
High index 0x27 =	High value of the index
Low index 0x70 =	Low value of the index => Index of the parameter = $0x2770_{hex}$ = 10096_{dec} The value $0x2770_{hex}$ is written to the bytes high index and low index.
Data MSB 0x00 Data 0x0F Data 0x42 Data LSB 0x40	The internal scaling of the MOVIMOT® inverter is 1000 times higher than the real scaling. The scaling factor then is 1 000 000_{dec} = 0xF4240. This value is written to the 4 data bytes.

The slave replies after the system-related transmission times for parameters.

"Write response OK" response telegram:

CTT2 service
Code
0x51

Code 0x51 =	Write response OK

22167811/EN – 04/2016

"Read request"

Once the CTT2 service "Write request" has been executed correctly, you can use the service $0x10_{hex}$ "Read request" to call the response telegram of the CTT2 service previously executed.

Select index $0x02_{hex}$ and length $0x08_{hex}$.

- If this service is transmitted to the double slave correctly, the MLK31A double slave replies with the response telegram $0x50_{hex}$ "Read response OK" and the data.
- In the event of an error, the MLK31A double slave sends the response telegram $0x90_{hex}$ "Read response not OK" (for the error code, refer to the AS-Interface specification).
- If the response data of the MOVIMOT® inverter is not available yet, the MLK31A double slave sends a response with error code "Busy" = "4" after the read access. The AS-Interface master must read the data again.

Example:

Requesting the correct response of the MOVIMOT® inverter from the previous change of the fixed setpoint n4 (*10096.38*)

"Read request" service:

CTT2 service		
Code	Index	Length
0x10	0x02	0x08

Code 0x10 =	Read request
Index 0x02 =	MOVILINK® parameter service
Length 0X08 =	Length of the MOVILINK® protocol

The slave replies after the system-related transfer time for the parameter.

"Read response OK" response telegram:

CTT2 service	MOVILINK® protocol							
Code	Administration	Subindex	Index High	Index Low	MSB data	LSB	LSB	LSB data
0x50	0x32	0x26	0x27	0x70	0x00	0x00	0x00	0x00

Code 0x50 =	Read response OK
Management 0x32 =	Write parameter => no MOVILINK® error
Subindex 0x26 =	Subindex of parameter fixed setpoint n4 (10096.38) 38_{dec} = 0x26
Index High 0x27 =	High value of the index
Index Low 0x70 =	Low value of the index
	=> Index of the parameter = $0x2770_{hex}$ = 10096_{dec}
	The value $0x2770_{hex}$ is written on the index high and index low bytes.

22167811/EN – 04/2016

Data MSB 0x00 Data 0x00 Data 0x00 Data LSB 0x00	If the MOVILINK® service has been executed correctly, the data byte value is 0x0 = 0_{dec}.

9.4.3 Use of the "Exchange request" service (example)

This example illustrates how to change individual parameters of the MOVIMOT® inverter using the CTT2 service "Exchange request" 0x1D. You can use this service as an alternative to the "Read request" and "Write request" service to read or write MOVIMOT® parameters.

First, check the communication by reading out the "ID object" with the "Read request" service.

Next, all you have to do is execute a "Request" service. The AS-Interface response telegram 0x5D already includes the MOVILINK® response of the MOVIMOT® inverter.

The following parameters of the MOVIMOT® inverter are to be changed:

- Ramp t11 up and t11 down to 0.5 s
- Fixed setpoint value n0 to 1000 min^{-1}
- Activation of brake release without drive enable signal (P738 = "ON")

In addition, the heat sink temperature is to be read.

22167811/EN – 04/2016

Checking the communication

Read out the ID object correctly in order to check the correct communication between the AS-Interface master and the MLK31A.

"Read request" service:

CTT2 service		
Code	Index	Length
0x10	0x00	0x06

Code 0x10 =	Read request
Index 0x00 =	ID object
Length 0X06 =	Length of the ID object

The slave replies after the system-related transfer time for the parameter.

"Read response OK" response telegram:

CTT2 service						
Code	Vendor ID High	Vendor ID Low	Device ID High	Device ID Low	Output/ input	Firmware version
0x50	0x00	0x0A	0x00	0x0A	0x00	0x01

Code 0x50 =	Read response OK
Vendor ID High 0x00 =	High value of the vendor ID
Vendor ID Low 0x0A =	Low value of the vendor ID
	=> Vendor ID = $0x000A_{hex} = 10_{dec}$
Device ID High 0x00 =	High value of the device ID
Device ID Low 0x0A =	Low value of the device ID
	=> Device ID = $0x000A_{hex} = 10_{dec}$
Output/input 0x00 =	No inputs and outputs
Firmware version 0x01	

22167811/EN – 04/2016

Activating Expert mode in the MOVIMOT® inverter

In order to be able to change parameters in the MOVIMOT® inverter, you have to activate Expert mode once as follows using parameter *P805*.

"Exchange request" service:

CTT2 service				MOVILINK® protocol							
Code	Index	Read length	Write length	Administration	Subindex	Index High	Index Low	MSB data	LSB	LSB	LSB data
0x1D	0x02	0x08	0x08	0x32	0x01	0x27	0x6F	0x00	0x00	0x00	0x01

Code 0x1D =	Exchange request
Index 0x02 =	MOVILINK® parameter service
Read length 0x08 =	Length of the MOVILINK® response
Write length 0x08 =	Length of the MOVILINK® request
Management 0x32 =	Write parameter
Subindex 0x01 =	Subindex of parameter *P805*
Index High 0x27 =	High value of the index
Index Low 0x6F =	Low value of the index
	=> Index of the parameters *P805* = $0x276F_{hex}$ = 10095_{dec}
	The value $0x2087_{hex}$ is written on bytes Index High and Index Low.
Data MSB 0x00	To activate Expert mode, parameter *P805* must be set to 1_{dec} = 0x1.
Data 0x00	
Data 0x00	This value is written to the 4 data bytes.
Data LSB 0x01	

When the MLK31A double slave receives the service "Exchange request" 0x1D, it sends the MOVILINK® protocol to the MOVIMOT® inverter. Once the MOVIMOT® inverter receives the MOVILINK® response, the MLK31A double slave sends the response "Exchange response OK" to the AS-Interface master. Thus, another "Read request" service of the AS-Interface master is not required.

The slave replies after the system-related transfer time for the parameter.

"Exchange response OK" response telegram:

CTT2 service	MOVILINK® protocol							
Code	Administration	Subindex	Index High	Index Low	MSB data	LSB	LSB	LSB data
0x5D	0x32	0x01	0x27	0x6F	0x00	0x00	0x00	0x00

Code 0x5D =	Exchange request OK
Management 0x32 =	Write parameter
Subindex 0x01 =	Subindex of parameter *P805*
Index High 0x27 =	High value of the index

22167811/EN – 04/2016

Index Low 0x6F =	Low value of the index => Index of the parameters *P805* = $0x276F_{hex}$ = 10095_{dec} The value $0x276F_{hex}$ is written on bytes Index High and Index Low.
Data MSB 0x00 Data 0x00 Data 0x00 Data LSB 0x00	If the MOVILINK® service has been executed correctly, the data value is 0_{dec} = 0x0

Deactivating the mechanical control elements

You have to deactivate the mechanical control elements because parameterization of the MOVIMOT® inverter is to be carried out via the AS-Interface. To do so, write the value 255_{dec} = 0xFFFF to parameter *P102*.

"Exchange request" service:

CTT2 service				MOVILINK® protocol							
Code	Index	Read length	Write length	Administration	Subindex	Index High	Index Low	MSB data	LSB	LSB	LSB data
0x1D	0x02	0x08	0x08	0x32	0x1E	0x27	0x70	0x00	0x00	0xFF	0xFF

Code 0x1D =	Exchange request
Index 0x02 =	MOVILINK® parameter service
Read length 0x08 =	Length of the MOVILINK® response
Write length 0x08 =	Length of the MOVILINK® request
Management 0x32 =	Write parameter
Subindex 0x1E =	Subindex of parameter *P102*
Index High 0x27 =	High value of the index
Index Low 0x70 =	Low value of the index => Index of the parameter *P102* = $0x2770_{hex}$ = 10096_{dec} The value $0x2770_{hex}$ is written to the bytes high index and low index.
Data MSB 0x00 Data 0x00 Data 0xFF Data LSB 0xFF	Parameter *P102* must be set to 65535_{dec} = 0xFFFF to deactivate the mechanical control elements. This value is written to the 4 data bytes.

When the MLK31A double slave receives the service "Exchange request" 0x1D, it sends the MOVILINK® protocol to the MOVIMOT® inverter. Once the MOVIMOT® inverter receives the MOVILINK® response, the MLK31A double slave sends the response "Exchange response OK" to the AS-Interface master. Thus, another "Read request" service of the AS-Interface master is not required.

The slave replies after the system-related transfer time for the parameter.

22167811/EN – 04/2016

"Exchange response OK" response telegram:

CTT2 service	MOVILINK® protocol							
Code	Ad-minis-tration	Sub-index	In-dex High	In-dex Low	MSB data	LSB	LSB	LSB data
0x5D	0x32	0x1E	0x27	0x70	0x00	0x00	0x00	0x00

Code 0x5D =	Exchange request OK
Management 0x32 =	Write parameter
Subindex 0x1E =	Subindex of parameter *P102*
Index High 0x27 =	High value of the index
Index Low 0x70 =	Low value of the index
	=> Index of the parameter *P102* = $0x2770_{hex}$ = 10096_{dec}
	The value $0x2770_{hex}$ is written on the index high and index low bytes.
Data MSB 0x00	If the MOVILINK® service has been executed correctly, the data value is 0_{dec} = 0x0
Data 0x00	
Data 0x00	
Data LSB 0x00	

22167811/EN – 04/2016

Setting ramp t11 up

Set the ramp time of ramp t11 up (*P130*) to 0.5 s.

"Exchange request" service:

CTT2 service				MOVILINK® protocol							
Code	Index	Read length	Write length	Ad-minis-tration	Sub-index	In-dex High	In-dex Low	MSB data	LSB	LSB	LSB data
0x1D	0x02	0x08	0x08	0x32	0x00	0x22	0x67	0x00	0x00	0x01	0xF4

Code 0x1D =	Exchange request
Index 0x02 =	MOVILINK® parameter service
Read length 0x08 =	Length of the MOVILINK® response
Write length 0x08 =	Length of the MOVILINK® request
Management 0x32 =	Write parameter
Subindex 0x00 =	Subindex of parameter *P130*
Index High 0x22 =	High value of the index
Index Low 0x67 =	Low value of the index
	=> Index of parameter *P130* = $0x2267_{hex}$ = 8807_{dec}
	The value $0x2267_{hex}$ is written on Index High and Index Low.
Data MSB 0x00	Specify the ramp time of the MOVIMOT® inverter in ms in order to set the ramp time to 0.5 s = 500 ms (500 ms = 500_{dec} = 0x1F4).
Data 0x00	
Data 0x01	This value is written to the 4 data bytes.
Data LSB 0xF4	

When the MLK31A double slave receives the service "Exchange request" 0x1D, it sends the MOVILINK® protocol to the MOVIMOT® inverter. Once the MOVIMOT® inverter receives the MOVILINK® response, the MLK31A double slave sends the response "Exchange response OK" to the AS-Interface master. Thus, another "Read request" service of the AS-Interface master is not required.

The slave replies after the system-related transfer time for the parameter.

"Exchange response OK" response telegram:

CTT2 service	MOVILINK® protocol							
Code	Ad-minis-tration	Sub-index	In-dex High	In-dex Low	MSB data	LSB	LSB	LSB data
0x5D	0x32	0x00	0x22	0x67	0x00	0x00	0x00	0x00

Code 0x5D =	Exchange request OK
Management 0x32 =	Write parameter
Subindex 0x00 =	Subindex of parameter *P130*
Index High 0x22 =	High value of the index

22167811/EN – 04/2016

Index Low 0x67 =	Low value of the index => Index of parameter = $0x2267_{hex}$ = 8807_{dec} The value $0x2267_{hex}$ is written on Index High and Index Low.
Data MSB 0x00 Data 0x00 Data 0x00 Data LSB 0x00	If the MOVILINK® service has been executed correctly, the data value is 0_{dec} = 0x0

Setting ramp t11 down

Set the ramp time of ramp t11 down (*P131*) to 0.5 s. The ramp time for ramp t11 down (*P131*) is set in the same way as the ramp time for ramp t11 up (*P130*).

Ramp t11 down (*P131*) has index 8808_{dec} = 0x2268 and subindex 0.

22167811/EN – 04/2016

Setting the fixed setpoint n0

Set fixed setpoint n0 (*P170*) to 1000 min^{-1}.

"Exchange request" service:

CTT2 service				MOVILINK® protocol							
Code	Index	Read length	Write length	Man-age-ment	Sub-index	High index	Low index	MSB data	Data	Data	LSB data
0x1D	0x02	0x08	0x08	0x32	0x00	0x21	0x29	0x00	0x0F	0x42	0x40

Code 0x1D =	Exchange request
Index 0x02 =	MOVILINK® parameter service
Read length 0x08 =	Length of the MOVILINK® response
Write length 0x08 =	Length of the MOVILINK® request
Management 0x32 =	Write parameter
Subindex 0x00 =	Subindex of parameter *P170*
High index 0x21 =	High value of the index
Low index 0x29 =	Low value of the index
	=> Index of parameter = $0x2129_{hex} = 8489_{dec}$
	The value $0x2129_{hex}$ is written to the bytes high index and low index.
Data MSB 0x00 Data 0x0F Data 0x42 Data LSB 0x40	The internal scaling of the MOVIMOT® inverter is 1000 times higher than the real scaling. The scaling factor then is $1\,000\,000_{dec}$ = 0xF4240. This value is written to the 4 data bytes.

When the MLK31A double slave receives the service "Exchange request" 0x1D, it sends the MOVILINK® protocol to the MOVIMOT® inverter. Once the MOVIMOT® inverter receives the MOVILINK® response, the MLK31A double slave sends the response "Exchange response OK" to the AS-Interface master. This means another "Read request" service of the AS-Interface master is not required.

The slave replies after the system-related transmission times for parameters.

"Exchange response OK" response telegram

CTT2 service	MOVILINK® protocol							
Code	Man-age-ment	Sub-index	High index	Low index	MSB data	Data	Data	LSB data
0x5D	0x32	0x00	0x21	0x29	0x00	0x00	0x00	0x00

Code 0x5D =	Exchange request OK
Management 0x32 =	Write parameter
Subindex 0x00 =	Subindex of parameter *P170*
High index 0x21 =	High value of the index

22167811/EN – 04/2016

Low index 0x29 =	Low value of the index => Index of parameter *P170* = $0x2129_{hex}$ = 8489_{dec} The value $0x2129_{hex}$ is written to the bytes high index and low index.
Data MSB 0x00 Data 0x00 Data 0x00 Data LSB 0x00	If the MOVILINK® service has been executed correctly, the data value is 0_{dec} = 0x0

Reading out the heat sink temperature

Read out the heat sink temperature from parameter *P014* as follows:

"Exchange request" service:

CTT2 service				MOVILINK® protocol							
Code	Index	Read length	Write length	Ad-minis-tration	Sub-index	In-dex High	In-dex Low	MSB data	LSB	LSB	LSB data
0x1D	0x02	0x08	0x08	0x31	0x00	0x20	0x87	0x00	0x00	0x00	0x00

Code 0x1D =	Exchange request
Index 0x02 =	MOVILINK® parameter service
Read length 0x08 =	Length of the MOVILINK® response
Write length 0x08 =	Length of the MOVILINK® request
Management 0x31 =	Read parameter
Subindex 0x00 =	Subindex of parameter *P014*
Index High 0x20 =	High value of the index
Index Low 0x87 =	Low value of the index => Index of parameter *P014* = $0x2087_{hex}$ = 8327_{dec} The value $0x2087_{hex}$ is written on bytes Index High and Index Low.
Data MSB 0x00 Data 0x00 Data 0x00 Data LSB 0x00	The value 0x00 is written to the data when the MOVIMOT® parameters are read.

When the MLK31A double slave receives the service "Exchange request" 0x1D, it sends the MOVILINK® protocol to the MOVIMOT® inverter. Once the MOVIMOT® inverter receives the MOVILINK® response, the MLK31A double slave sends the response "Exchange response OK" to the AS-Interface master. Thus, another "Read request" service of the AS-Interface master is not required.

The slave replies after the system-related transfer time for the parameter.

22167811/EN – 04/2016

"Exchange response OK" response telegram:

CTT2 service	MOVILINK® protocol							
Code	Ad-minis-tration	Sub-index	In-dex High	In-dex Low	MSB data	LSB	LSB	LSB data
0x5D	0x31	0x00	0x20	0x87	0x00	0x00	0x00	0x14

Code 0x5D =	Exchange request OK
Management 0x31 =	Read parameter => no MOVILINK® error
Subindex 0x00 =	Subindex of parameter *P014*
Index High 0x20 =	High value of the index
Index Low 0x87 =	Low value of the index
	=> Index = $0x2087_{hex} = 8893_{dec}$
	The value $0x2087_{hex}$ is written to the bytes high index and low index.
Data MSB 0x00 Data 0x00 Data 0x00 Data LSB 0x14	When the MOVILINK® service has been executed correctly, the data bytes transmit the heat sink temperature, e.g. 20°C = 0x14. The unscaled heat sink temperature is stored in the MOVIMOT® inverter. The value 0x14 corresponds to a temperature of 20°C.

22167811/EN – 04/2016

9.4.4 Use of the "Read request" and "Write request" service (example)

This example illustrates how to change individual parameters of the MOVIMOT® inverter using the CTT2 services "Write request" 0x11 and "Read request" 0x10.

The following parameters of the MOVIMOT® inverter are to be changed:

- Ramp t11 up and t11 down to 0.5 s
- Fixed setpoint value n0 to 1000 min^{-1}
- Activation of the option to release the brake without drive enable signal (*P738* = "ON")

In addition, the heat sink temperature is to be read.

Checking the communication

Read out the ID object correctly in order to check the correct communication between the AS-Interface master and the MLK31A.

"Read request" service:

CTT2 service		
Code	Index	Length
0x10	0x00	0x06

Code 0x10 =	Read request
Index 0x00 =	ID object
Length 0X06 =	Length of the ID object

The slave replies after the system-related transfer time for the parameter.

"Read response OK" response telegram:

CTT2 service						
Code	Vendor ID High	Vendor ID Low	Device ID High	Device ID Low	Output/ input	Firmware version
0x50	0x00	0x0A	0x00	0x0A	0x00	0x01

Code 0x50 =	Read response OK
Vendor ID High 0x00 =	High value of the vendor ID
Vendor ID Low 0x0A =	Low value of the vendor ID
	=> Vendor ID = $0x000A_{hex} = 10_{dec}$
Device ID High 0x00 =	High value of the device ID
Device ID Low 0x0A =	Low value of the device ID
	=> Device ID = $0x000A_{hex} = 10_{dec}$
Output/input 0x00 =	No inputs and outputs
Firmware version 0x01	

22167811/EN – 04/2016

Activating Expert mode in the MOVIMOT® inverter

In order to be able to change parameters in the MOVIMOT® inverter, you have to activate Expert mode once as follows using parameter *P805*.

"Write request" service:

CTT2 service			MOVILINK® protocol							
Code	Index	Length	Administration	Subindex	Index High	Index Low	MSB data	LSB	LSB	LSB data
0x11	0x02	0x08	0x32	0x01	0x27	0x6F	0x00	0x00	0x00	0x01

Code 0x11 =	Write request
Index 0x02 =	MOVILINK® parameter service
Length 0x08 =	Length of the MOVILINK® protocol
Management 0x32 =	Write parameter
Subindex 0x01 =	Subindex of parameter *P805*
Index High 0x27 =	High value of the index
Index Low 0x6F =	Low value of the index => Index of the parameters *P805* = $0x276F_{hex}$ = 10095_{dec} The value $0x276F_{hex}$ is written on bytes Index High and Index Low.
Data MSB 0x00 Data 0x00 Data 0x00 Data LSB 0x01	To activate Expert mode, parameter *P805* must be set to 1_{dec} = 0x1. This value is written to the 4 data bytes.

The slave replies after the system-related transfer time for the parameter.

"Write response OK" response telegram:

CTT2 service
Code
0x51

Code 0x51 =	Write response OK

Once the MLK31A double slave has correctly received the data, it immediately sends the response 0x51 "Write response OK" to the master. Simultaneously, the MOVILINK® protocol is sent to the MOVIMOT® inverter.

The response of the MOVILINK® protocol is evaluated with the "Read request" service as follows in order to make sure that the MOVIMOT® inverter has changed parameter *P805*.

"Read request" service:

CTT2 service		
Code	Index	Length
0x10	0x02	0x08

22167811/EN – 04/2016

Code 0x10 =	Read request
Index 0x02 =	MOVILINK® parameter service
Length 0X08 =	Length of the MOVILINK® protocol

The slave replies after the system-related transfer time for the parameter.

"Read response OK" response telegram:

CTT2 service	MOVILINK® protocol							
Code	Ad-minis-tration	Sub-index	Index High	Index Low	MSB data	LSB	LSB	LSB data
0x50	0x32	0x01	0x27	0x6F	0x00	0x00	0x00	0x00

Code 0x50 =	Read response OK
Management 0x32 =	Write parameter => no MOVILINK® error
Subindex 0x01 =	Subindex of parameter *P805*
Index High 0x27 =	High value of the index
Index Low 0x6F =	Low value of the index
	=> Index of the parameters *P805* = $0x276F_{hex}$ = 10095_{dec}
	The value $0x276F_{hex}$ is written on bytes Index High and Index Low.
Data MSB 0x00	If the MOVILINK® service has been executed correctly, the data byte value is 0x0 = 0_{dec}.
Data 0x00	
Data 0x00	
Data LSB 0x00	

Deactivating the mechanical control elements

You have to deactivate the mechanical control elements because parameterization of the MOVIMOT® inverter is to be carried out via the AS-Interface. To do so, write the value 255_{dec} = 0xFFFF to parameter *P102*.

"Write request" service:

CTT2 service			MOVILINK® protocol							
Code	Index	Length	Ad-minis-tration	Sub-index	Index High	Index Low	MSB data	LSB	LSB	LSB data
0x11	0x02	0x08	0x32	0x1E	0x27	0x70	0x00	0x00	0xFF	0xFF

Code 0x11 =	Write request
Index 0x02 =	MOVILINK® parameter service
Length 0x08 =	Length of the MOVILINK® protocol
Management 0x32 =	Write parameter
Subindex 0x1E =	Subindex of parameter *P102*
Index High 0x27 =	High value of the index

22167811/EN – 04/2016

Index Low 0x70 =	Low value of the index => Index of the parameter *P102* = $0x2770_{hex}$ = 10096_{dec} The value $0x2770_{hex}$ is written on the index high and index low bytes.
Data MSB 0x00 Data 0x00 Data 0xFF Data LSB 0xFF	Parameter *P102* must be set to 65535_{dec} = 0xFFFF to deactivate the mechanical control elements. This value is written to the 4 data bytes.

The slave replies after the system-related transfer time for the parameter.

"Write response OK" response telegram:

CTT2 service
Code
0x51

Code 0x51 =	Write response OK

Once the MLK31A double slave has correctly received the data, it immediately sends the response 0x51 "Write response OK" to the master. Simultaneously, the MOVILINK® protocol is sent to the MOVIMOT® inverter.

The response of the MOVILINK® protocol is evaluated with the "Read request" service as follows in order to make sure that the MOVIMOT® inverter has changed parameter *P102*.

"Read request" service:

CTT2 service		
Code	Index	Length
0x10	0x02	0x08

Code 0x10 =	Read request
Index 0x02 =	MOVILINK® parameter service
Length 0X08 =	Length of the MOVILINK® protocol

The slave replies after the system-related transfer time for the parameter.

"Read response OK" response telegram:

CTT2 service	MOVILINK® protocol							
Code	Administration	Subindex	Index High	Index Low	MSB data	LSB	LSB	LSB data
0x50	0x32	0x1E	0x27	0x70	0x00	0x00	0x00	0x00

Code 0x50 =	Read response OK
Management 0x32 =	Write parameter => no MOVILINK® error
Subindex 0x1E =	Subindex of parameter *P102*
Index High 0x27 =	High value of the index

22167811/EN – 04/2016

Index Low 0x70 =	Low value of the index => Index of the parameter *P102* = $0x2770_{hex}$ = 10096_{dec} The value $0x2770_{hex}$ is written on the index high and index low bytes.
Data MSB 0x00 Data 0x00 Data 0x00 Data LSB 0x00	If the MOVILINK® service has been executed correctly, the data byte value is 0x0 = 0_{dec}.

Setting ramp t11 up

Set the ramp time of ramp t11 up (*P130*) to 0.5 s.

"Write request" service:

CTT2 service			MOVILINK® protocol							
Code	Index	Length	Ad-minis-tration	Sub-index	Index High	Index Low	MSB data	LSB	LSB	LSB data
0x11	0x02	0x08	0x32	0x00	0x22	0x67	0x00	0x00	0x01	0xF4

Code 0x11 =	Write request
Index 0x02 =	MOVILINK® parameter service
Length 0x08 =	Length of the MOVILINK® protocol
Management 0x32 =	Write parameter
Subindex 0x00 =	Subindex of parameter *P130*
Index High 0x22 =	High value of the index
Index Low 0x67 =	Low value of the index => Index of parameter *P130* = $0x2267_{hex}$ = 8807_{dec} The value $0x2267_{hex}$ is written on bytes Index High and Index Low.
Data MSB 0x00 Data 0x00 Data 0x01 Data LSB 0xF4	Specify the ramp time of the MOVIMOT® inverter in ms in order to set the ramp time to 0.5 s = 500 ms (500 ms = 500_{dec} = 0x1F4). This value is written to the 4 data bytes.

The slave replies after the system-related transfer time for the parameter.

"Write response OK" response telegram:

CTT2 service
Code
0x51

Code 0x51 =	Write response OK

Once the MLK31A double slave has correctly received the data, it immediately sends the response 0x51 "Write response OK" to the master. Simultaneously, the MOVILINK® protocol is sent to the MOVIMOT® inverter.

22167811/EN – 04/2016

The response of the MOVILINK® protocol is evaluated with the "Read request" service as follows in order to make sure that the MOVIMOT® inverter has changed parameter *P130*.

"Read request" service:

CTT2 service		
Code	Index	Length
0x10	0x02	0x08

Code 0x10 =	Read request
Index 0x02 =	MOVILINK® parameter service
Length 0X08 =	Length of the MOVILINK® protocol

The slave replies after the system-related transfer time for the parameter.

"Read response OK" response telegram:

CTT2 service	MOVILINK® protocol							
Code	Administration	Subindex	Index High	Index Low	MSB data	LSB	LSB	LSB data
0x50	0x32	0x00	0x22	0x67	0x00	0x00	0x00	0x00

Code 0x50 =	Read response OK
Management 0x32 =	Write parameter => no MOVILINK® error
Subindex 0x00 =	Subindex of parameter *P130*
Index High 0x22 =	High value of the index
Index Low 0x67 =	Low value of the index
	=> Index of parameter *P130* = $0x2267_{hex}$ = 8807_{dec}
	The value $0x2267_{hex}$ is written on bytes Index High and Index Low.
Data MSB 0x00	If the MOVILINK® service has been executed correctly, the data byte value is 0x0 = 0_{dec}.
Data 0x00	
Data 0x00	
Data LSB 0x00	

Setting ramp t11 down

Set the ramp time of ramp t11 down (*P131*) to 0.5 s. The ramp time for ramp t11 down (*P131*) is set in the same way as the ramp time for ramp t11 up (*P130*).

Ramp t11 down (*P131*) has index 8808_{dec} = 0x2268 and subindex 0.

22167811/EN – 04/2016

Setting the fixed setpoint n0

Set fixed setpoint n0 (*P170*) to 1000 min^{-1}.

"Write request" service:

CTT2 service			MOVILINK® protocol							
Code	Index	Length	Management	Subindex	High index	Low index	MSB data	Data	Data	LSB data
0x11	0x02	0x08	0x32	0x00	0x21	0x29	0x00	0x0F	0x42	0x40

Code 0x11 =	Write request
Index 0x02 =	MOVILINK® parameter service
Length 0x08 =	Length of the MOVILINK® protocol
Management 0x32 =	Write parameter
Subindex 0x00 =	Subindex of parameter *P170*
High index 0x21 =	High value of the index
Low index 0x29 =	Low value of the index
	=> Index of parameter *P170* = $0x2129_{hex}$ = 8489_{dec}
	The value $0x2129_{hex}$ is written to the bytes high index and low index.
Data MSB 0x00	The internal scaling of the MOVIMOT® inverter is 1000 times higher than the real scaling.
Data 0x0F	
Data 0x42	The scaling factor then is $1\ 000\ 000_{dec}$ = 0xF4240.
Data LSB 0x40	This value is written to the 4 data bytes.

The slave replies after the system-related transmission times for parameters.

"Write response OK" response telegram:

CTT2 service
Code
0x51

Code 0x51 = Write response OK

Once the MLK31A double slave has correctly received the data, it immediately sends the response 0x51 "Write response OK" to the master. Simultaneously, the MOVILINK® protocol is sent to the MOVIMOT® inverter.

The response of the MOVILINK® protocol is evaluated with the "Read request" service as follows in order to make sure that the MOVIMOT® inverter has changed parameter *P170*.

"Read request" service:

CTT2 service		
Code	Index	Length
0x10	0x02	0x08

Code 0x10 = Read request

22167811/EN – 04/2016

Index 0x02 =	MOVILINK® parameter service
Length 0X08 =	Length of the MOVILINK® protocol

The slave replies after the system-related transmission times for parameters.

"Read response OK" response telegram:

CTT2 service	MOVILINK® protocol							
Code	Man-age-ment	Sub-index	High index	Low index	MSB data	Data	Data	LSB data
0x50	0x32	0x00	0x21	0x29	0x00	0x00	0x00	0x00

Code 0x50 =	Read response OK
Management 0x32 =	Write parameter => no MOVILINK® error
Subindex 0x00 =	Subindex of parameter *P130*
High index 0x21 =	High value of the index
Low index 0x29 =	Low value of the index
	=> Index of parameter *P170* = $0x2129_{hex}$ = 8489_{dec}
	The value $0x2129_{hex}$ is written to the bytes high index and low index.
Data MSB 0x00	If the MOVILINK® service has been executed correctly, the data byte value is 0x0 = $0_{dec.}$
Data 0x00	
Data 0x00	
Data LSB 0x00	

Activation of brake release without drive enable

The brake of the drive can be controlled via the A-slave of the MLK31A double slave. Before, you have to activate parameter *P738* as follows.

"Write request" service:

CTT2 service			MOVILINK® protocol							
Code	Index	Length	Ad-minis-tration	Sub-index	Index High	Index Low	MSB data	LSB	LSB	LSB data
0x11	0x02	0x08	0x32	0x00	0x22	0xBD	0x00	0x00	0x00	0x01

Code 0x11 =	Write request
Index 0x02 =	MOVILINK® parameter service
Length 0x08 =	Length of the MOVILINK® protocol
Management 0x32 =	Write parameter
Subindex 0x00 =	Subindex of parameter *P738*
Index High 0x22 =	High value of the index
Index Low 0xBD =	Low value of the index
	=> Index of parameter *P738* = $0x22BD_{hex}$ = 8893_{dec}
	The value $0x22BD_{hex}$ is written on bytes Index High and Index Low.

22167811/EN – 04/2016

Data MSB 0x00	Parameter *P738* must be set to 1_{dec} = 0x1 to activate the "Brake release without drive enable" function.
Data 0x00	This value is written to the 4 data bytes.
Data 0x00	
Data LSB 0x01	

The slave replies after the system-related transfer time for the parameter.

"Write response OK" response telegram:

CTT2 service
Code
0x51

Code 0x51 =	Write response OK

Once the MLK31A double slave has correctly received the data, it immediately sends the response 0x51 "Write response OK" to the master. Simultaneously, the MOVILINK® protocol is sent to the MOVIMOT® inverter.

The response of the MOVILINK® protocol is evaluated with the "Read request" service as follows in order to make sure that the MOVIMOT® inverter has changed parameter *P738*.

"Read request" service:

CTT2 service		
Code	Index	Length
0x10	0x02	0x08

Code 0x10 =	Read request
Index 0x02 =	MOVILINK® parameter service
Length 0X08 =	Length of the MOVILINK® protocol

The slave replies after the system-related transfer time for the parameter.

"Read response OK" response telegram:

CTT2 service	MOVILINK® protocol							
Code	Administration	Subindex	Index High	Index Low	MSB data	LSB	LSB	LSB data
0x50	0x32	0x00	0x22	0xBD	0x00	0x00	0x00	0x00

Code 0x50 =	Read response OK
Management 0x32 =	Write parameter => no MOVILINK® error
Subindex 0x00 =	Subindex of parameter *P738*
Index High 0x22 =	High value of the index
Index Low 0xBD =	Low value of the index
	=> Index of parameter *P738* = $0x22BD_{hex}$ = 8893_{dec}
	The value $0x22BD_{hex}$ is written on bytes Index High and Index Low.

22167811/EN – 04/2016

Data MSB 0x00 Data 0x00 Data 0x00 Data LSB 0x00	If the MOVILINK® service has been executed correctly, the data byte value is 0x0 = 0_{dec}.

Reading out the heat sink temperature

Read out the heat sink temperature from parameter *P014* as follows:

"Write request" service:

CTT2 service			MOVILINK® protocol							
Code	Index	Length	Ad-minis-tration	Sub-index	Index High	Index Low	MSB data	LSB	LSB	LSB data
0x11	0x02	0x08	0x31	0x00	0x20	0x87	0x00	0x00	0x00	0x00

Code 0x11 =	Write request
Index 0x02 =	MOVILINK® parameter service
Length 0x08 =	Length of the MOVILINK® protocol
Management 0x31 =	Read parameter
Subindex 0x00 =	Subindex of parameter *P014*
Index High 0x20 =	High value of the index
Index Low 0x87 =	Low value of the index => Index of parameter *P014* = $0x2087_{hex}$ = 8327_{dec} The value $0x2087_{hex}$ is written on bytes Index High and Index Low.
Data MSB 0x00 Data 0x00 Data 0x00 Data LSB 0x00	The value 0x00 is written to the data when the MOVIMOT® parameters are read.

The slave replies after the system-related transfer time for the parameter.

"Write response OK" response telegram:

CTT2 service
Code
0x51

Code 0x51 =	Write response OK

Once the MLK31A double slave has correctly received the data, it immediately sends the response 0x51 "Write response OK" to the master. Simultaneously, the MOVILINK® protocol is sent to the MOVIMOT® inverter.

The "Read request" service must be executed to obtain the value of the parameter read out by the MOVIMOT® inverter.

22167811/EN – 04/2016

"Read request" service:

CTT2 service		
Code	Index	Length
0x10	0x02	0x08

Code 0x10 =	Read request
Index 0x02 =	MOVILINK® parameter service
Length 0X08 =	Length of the MOVILINK® protocol

The slave replies after the system-related transfer time for the parameter.

"Read response OK" response telegram:

CTT2 service	MOVILINK® protocol							
Code	Administration	Subindex	Index High	Index Low	MSB data	LSB	LSB	LSB data
0x50	0x31	0x00	0x20	0x87	0x00	0x00	0x00	0x14

Code 0x50 =	Read response OK
Management 0x31 =	Read parameter => no MOVILINK® error
Subindex 0x00 =	Subindex of parameter *P014*
Index High 0x20 =	High value of the index
Index Low 0x87 =	Low value of the index
	=> Index of parameter *P014* = $0x2087_{hex}$ = 8893_{dec}
	The value $0x2087_{hex}$ is written on bytes Index High and Index Low.
Data MSB 0x00 Data 0x00 Data 0x00 Data LSB 0x14	When the MOVILINK® service has been executed correctly, the data bytes transmit the heat sink temperature, e.g. 20°C = 0x14. The unscaled heat sink temperature is stored in the MOVIMOT® inverter. The value 0x14 corresponds to a temperature of 20°C.

22167811/EN – 04/2016

10 Startup of MLK32A

INFORMATION

Startup with the MLK32A only makes sense in Expert mode.

For the startup with MLK32A, also adhere to chapter "Startup of MOVIMOT® with MLK.. in Expert mode".

10.1 MLK32A binary slave – functional description

10.1.1 Operating principle

An AS-Interface master according to the AS-Interface specification 3.0, rev. 2 in conjunction with the M4 master profile is required for controlling the MLK32A binary slave.

You must not connect more than 62 of those slaves to one AS-Interface branch.

10.1.2 Meaning of the AS-Interface data and parameter bits

The AS-Interface master transmits data bits and parameter bits to the MLK32A option. The MLK32A option forwards 4 data bits and 3 parameter bits without interpretation via RS485 communication to the MOVIMOT® inverter.

The MOVIMOT® inverter contains several function modules (assignment tables) that assign specific drive functions to the data bits. For information on function assignment, refer to chapter "Function modules" (→ 🗎 196).

Parameter bits

- 3 of the acyclic parameter bits (P2 – P0) are used for switching between the individual function modules. These parameter bits determine the meaning of the data bits.
- In the extended address mode, the fourth parameter bit is not available for the user.
- Parameter selection between function modules is also possible during ongoing operation and with enabled MOVIMOT® inverter. The meaning of the data bits might change in this case.
- The parameter input bits are not used.

22167811/EN – 04/2016

Data bits

The following table shows the assignment of the digital input data bits (cycle time: max 10 ms):

Parameter bits		Function of the input data bits			
(P2 P1 $P0_{bin}$)	Function $module_{hex}$	Bit 4 (DI3)	Bit 3 (DI2)	Bit 2 (DI1)	Bit 1 (DI0)
010_{bin} – 111_{bin}	2_{hex} – 7_{hex}	Status Sensor 2	Status Sensor 1	Status of MOVIMOT® according to chapter "Description of the data bits, function modules" (→ 🗎 197)	
000_{bin} – 001_{bin}	0_{hex} – 1_{hex}	Status of MOVIMOT® according to chapter "Description of the data bits, function modules" (→ 🗎 197)			

Parameter bits P2 – P0 are used for selecting the function modules.

- When function modules 2_{hex} – 7_{hex} are selected, data bits DI0 and DI1 are transmitted from the slave to the master according to the MOVIMOT® status word. Data bits DI2 and DI3 contain the state of sensor inputs DI2 and DI3.
- When function modules 0_{hex} – 1_{hex} are selected, all 4 data bits DI0 – DI3 are transmitted from the slave to the master according to the MOVIMOT® status word. The state of the sensor inputs is not transmitted.

22167811/EN – 04/2016

10.2 Startup procedure

⚠ WARNING

Electric shock from capacitors that have not been fully discharged.

Severe or fatal injuries.

- Disconnect the inverter from the power. Observe the minimum switch-off time after disconnection from the supply system:
  - **1 minute**

1. Remove the MOVIMOT® inverter from the connection box.
2. Set the required AS-Interface address:
   - ⇨ With a hand-held programming device (→ 🗎 195)
   - ⇨ or with a master (see description of the AS-Interface master)
3. Check the connection of the MOVIMOT® inverter.
   - ⇨ See chapter "Electrical Installation".
4. Set DIP switches S1/1 – S1/4 as follows:

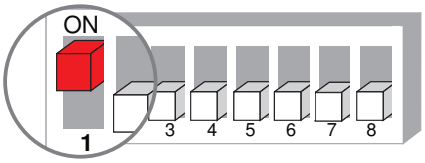

9007199592524939

5. Place the MOVIMOT® inverter onto the connection box and screw it on tightly.
6. Switch on the following voltages:
   - ⇨ AS-Interface voltage
   - ⇨ DC 24 V auxiliary voltage
   - ⇨ Line voltage

22167811/EN – 04/2016

10.2.1 Assigning the slave address

An AS-Interface master according to the AS-Interface specification 3.0, rev. 2 in conjunction with the M4 master profile is required for controlling the MLK32A binary slave.

You have the following options for assigning the AS-Interface address of the MOVIMOT® drive with AS-Interface option MLK32A (address 1A – 31A and 1B – 31B):

- Addresses are assigned automatically within a configured AS-Interface system when replacing a MOVIMOT® drive with MLK32A AS-Interface option.

  The following requirements must be met:

  – The new MOVIMOT® drive with AS-Interface option MLK32A must have the address 0.

  – If you need to replace several MOVIMOT® drives with AS-Interface option MLK32A, you must replace them individually (one after the other).
- Manual address assignment via the system master.

  The drives must be connected to the AS-Interface cable one after the other. Doing so prevents several MOVIMOT® drives with AS-Interface option MLK32A from having assigned the same address.
- Manual address assignment using a hand-held AS-Interface programming device.

  Observe the notes in the next chapter when connecting the MOVIMOT® drives with AS-Interface option MLK32A to the AS-Interface cable.

INFORMATION

Observe the following notes if you change the AS-Interface address of the MLK32A AS-Interface option after the corresponding address assignment (address > 0):

- The new address must not be used by another projected slave.

22167811/EN – 04/2016

Assigning the slave address using a hand-held programming device

Hand-held AS-Interface programming devices offer the following functions:

- Reading and changing an AS-Interface slave address
- Reading the AS-Interface profile
- Reading and changing the data and parameter bits
- Function test and test run.

When using a hand-held programming device, you need a **2-core** connection cable that fits onto the AS-interface plug connector of MOVIMOT® (see the following figure).

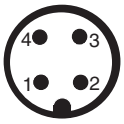

1: AS-Interface +
2: 0V24 [1]
3: AS-Interface -
4: 24V [1]

1127256715

[1] Do not connect pin 2 and 4 for the address assignment!

NOTICE The hand-held programming device can be damaged if not connected properly.

- The hand-held programming device may **only** be connected via pins 1 "AS-Interface +" and 3 "AS-Interface -" with the AS-Interface plug connector.

Example:

Disconnect the AS-Interface nodes from the AS-Interface network **one at a time** and assign addresses via the hand-held programming device (A).

Reconnect the respective AS-Interface node to the AS-Interface network (B).

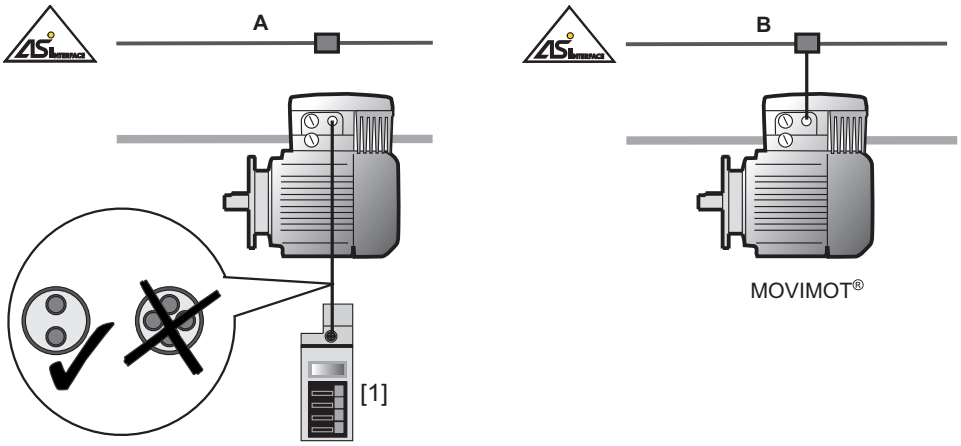

9007200382410891

[1] AS-Interface hand-held programming device

22167811/EN – 04/2016

10.3 Function modules

The drive-specific function assignment of the cyclic data bits is carried out in the MOVIMOT® inverter. This chapter describes this function assignment.

The AS-Interface parameter bits P2 – P0 are used for switching between the drive functions. These parameters determine the meaning of the data bits. It is also possible to switch between the function modules during operation and with enabled MOVIMOT® inverter. The meaning of the data bits might change in this case.

10.3.1 Descriptions of the parameter bits

The following table shows the function assignment of the data bits to the selected function module (AS-Interface parameter bits).

AS-Interface parameter bits		Function of the data bits
(P2 P1 $P0_{bin}$)	**Function $module_{hex}$**	
111_{bin}	7_{hex}	Binary mode (default), control compatible with SEW binary slave
110_{bin}	6_{hex}	Reserved
101_{bin}	5_{hex}	6 fixed setpoints with the ramps t11 up and t11 down Status messages Ramp switchover between the function modules 4_{hex} and 5_{hex}
100_{bin}	4_{hex}	6 fixed setpoints with the ramps t15 up and t15 down Status messages Ramp switchover between the function modules 5_{hex} and 4_{hex}
011_{bin}	3_{hex}	3 fixed setpoints with the ramps t15 up and t15 down 3 fixed setpoints with the ramps t16 up and t16 down Status messages Ramp switchover within function module 3_{hex}
010_{bin}	2_{hex}	Reserved
001_{bin}	1_{hex}	6 fixed setpoints with the ramps t11 up and t11 down Extended fault diagnosis No sensor inputs
000_{bin}	0_{hex}	Reserved

- When function modules 2_{hex} – 7_{hex} are selected, data bits DI0 and DI1 are transmitted from the slave to the master according to the MOVIMOT® status word. Data bits DI2 and DI3 contain the state of sensor inputs DI2 and DI3.
- When function modules 0_{hex} – 1_{hex} are selected, all 4 data bits DI0 – DI3 are transmitted from the slave to the master according to the MOVIMOT® status word. The state of the sensor inputs is not transmitted.

If the AS-Interface master selects the parameter bits with a reserved function, the MOVIMOT® drive changes to "Stop".

22167811/EN – 04/2016

10.3.2 Description of the data bits, function modules

Function module 7_{hex}

The cyclic operation with the function module 7_{hex} represents a function compatible with the SEW binary slave (without scaling function).

The MLK3.A option is like an I/O module with 4 input and 4 output data bits.

The MOVIMOT® drive is controlled via output data bits.

Output data AS-Interface master → MLK3.A option

Function module 7_{hex} (AS-interface parameter bits = 111_{bin})	
Data bit	**Function**
DO0	CW operation/Stop
DO1	CCW operation/Stop
DO2	Setpoint changeover f1/f2
DO3	Reset[1)] /controller enable

1) In the event of an edge change "0" → "1" (only effective in case of an error)

Input data of MLK32A option → AS-Interface master

Function module 7_{hex} (AS-interface parameter bits = 111_{bin})				
Data bit				**Function**
DI3	**DI2**	**DI1**	**DI0**	
		0	0	MOVIMOT® is **not** ready. (Error message MOVIMOT® or 400/460/230-voltage supply not connected)
		1	0	MOVIMOT® is **not** ready. (Error message RS485 communication or 24 V supply of the MOVIMOT® inverter not connected)
		0	1	MOVIMOT® is ready. Control via AS-Interface.
		1	1	MOVIMOT® is ready. Control via manual mode.
	0			Signal of sensor 1 = "0".
	1			Signal of sensor 1 = "1".
0				Signal of sensor 2 = "0".
1				Signal of sensor 2 = "1".

INFORMATION

After the AS-Interface supply voltage is connected, the MOVIMOT® drive is not immediately ready for operation (DI3 = 0, DI2 = 0, DI1 = 0 und DI0 = 0).

Only after a few seconds does the MOVIMOT® inverter issue a ready signal (DI1 = 0 or 1 and DI0 = 1) or the AS-Interface option MLK recognizes that no communication to the MOVIMOT® inverter exists (DI1 = 1 and DI0 = 0).

After the AS-Interface master is switched on, the signals of sensors DI2 and DI3 are only available 500 ms after the communication to the MLK32A has been established.

22167811/EN – 04/2016

Function module 5_{hex}

The cyclic operation with function module 5_{hex} allows for selecting 6 fixed setpoints with ramps t11 up and t11 down.

The output data bits are binary coded and interpreted as 16 different control codes.

The output and input data bits are assigned the following functions:

Output data AS-Interface master → MLK3.A option

Function module 5_{hex} (AS-interface parameter bits = 101_{bin})				
Data bit		**Function**		
bin.	**dec.**			
0000_{bin}	0_{dec}	Stop		Stop ramp t13 (*P136*)
0001_{bin}	1_{dec}	Stop/inhibit		Ramp t11 down (*P131)*
0010_{bin}	2_{dec}	CW operation,	Fixed setpoint n0 (*P170*)	Ramp t11 up (*P130)*, t11 down (*P131)*
0011_{bin}	3_{dec}	CCW operation,	Fixed setpoint n0 (*P170*)	Ramp t11 up (*P130)*, t11 down (*P131)*
0100_{bin}	4_{dec}	CW operation,	Fixed setpoint n1 (*P171*)	Ramp t11 up (*P130)*, t11 down (*P131)*
0101_{bin}	5_{dec}	CCW operation,	Fixed setpoint n1 (*P171*)	Ramp t11 up (*P130)*, t11 down (*P131)*
0110_{bin}	6_{dec}	CW operation,	Fixed setpoint n2 (*P172*)	Ramp t11 up (*P130)*, t11 down (*P131)*
0111_{bin}	7_{dec}	CCW operation,	Fixed setpoint n2 (*P172*)	Ramp t11 up (*P130)*, t11 down (*P131)*
1000_{bin}	8_{dec}	CW operation,	Fixed setpoint n3 (*P173*)	Ramp t11 up (*P130)*, t11 down (*P131)*
1001_{bin}	9_{dec}	CCW operation,	Fixed setpoint n3 (*P173*)	Ramp t11 up (*P130)*, t11 down (*P131)*
1010_{bin}	10_{dec}	CW operation,	Fixed setpoint n4 (*10096.38*)	Ramp t11 up (*P130)*, t11 down (*P131)*
1011_{bin}	11_{dec}	CCW operation,	Fixed setpoint n4 (*10096.38*)	Ramp t11 up (*P130)*, t11 down (*P131)*
1100_{bin}	12_{dec}	CW operation,	Fixed setpoint n5 (*10096.39*)	Ramp t11 up (*P130)*, t11 down (*P131)*
1101_{bin}	13_{dec}	CCW operation,	Fixed setpoint n5 (*10096.39*)	Ramp t11 up (*P130)*, t11 down (*P131)*
1110_{bin}	14_{dec}	Brake release without drive enable (only if DIP switch S2/1 = "ON" or parameter *P738* = "ON")		
1111_{bin}	15_{dec}	Stop Reset (only effective in case of an error)		Stop ramp t13 (*P136*)

22167811/EN – 04/2016

Input data of MLK32A option → AS-Interface master

Function module 5_{hex} (AS-interface parameter bits = 101_{bin})				
Data bit				Function
DI3	DI2	DI1	DI0	
		0	0	MOVIMOT® is **not** ready. (Error message MOVIMOT® or 400/460/230-voltage supply not connected)
		1	0	MOVIMOT® is **not** ready. (Error message RS485 communication or 24 V supply of the MOVIMOT® inverter not connected)
		0	1	MOVIMOT® is ready. Control via AS-Interface.
		1	1	MOVIMOT® is ready. Control via manual mode.
	0			Signal of sensor 1 = "0".
	1			Signal of sensor 1 = "1".
0				Signal of sensor 2 = "0".
1				Signal of sensor 2 = "1".

INFORMATION

After the AS-Interface supply voltage is connected, the MOVIMOT® drive is not immediately ready for operation (DI3 = 0, DI2 = 0, DI1 = 0 und DI0 = 0).

Only after a few seconds does the MOVIMOT® inverter issue a ready signal (DI1 = 0 or 1 and DI0 = 1) or the AS-Interface option MLK recognizes that no communication to the MOVIMOT® inverter exists (DI1 = 1 and DI0 = 0).

After the AS-Interface master is switched on, the signals of sensors DI2 and DI3 are only available 500 ms after the communication to the MLK32A has been established.

22167811/EN – 04/2016

Function module 4_{hex}

The cyclic operation with function module 4_{hex} allows for selecting 6 fixed setpoints with ramps t15 up and t15 down.

This operation is identical to the operation with function module 5_{hex}, however, ramps t15 up and t15 down are used.

This means switching between function modules 4_{hex} and 5_{hex} realizes a switching between the ramps during operation. This ramp switchover can be used for a load-dependent optimization of the application.

The output and input data bits are assigned the following functions:

Output data AS-Interface master → MLK3.A option

Function module 4_{hex} (AS-interface parameter bits = 100_{bin})				
Data bit		**Function**		
bin.	**dec.**			
0000_{bin}	0_{dec}	Stop		Stop ramp t13 (*P136*)
0001_{bin}	1_{dec}	Stop/inhibit		Ramp t15 down (*10504.11*)
0010_{bin}	2_{dec}	CW operation,	Fixed setpoint n0 (*P170*)	Ramps t15 up (*10504.1*), t15 down (*10504.11*)
0011_{bin}	3_{dec}	CCW operation,	Fixed setpoint n0 (*P170*)	Ramps t15 up (*10504.1*), t15 down (*10504.11*)
0100_{bin}	4_{dec}	CW operation,	Fixed setpoint n1 (*P171*)	Ramps t15 up (*10504.1*), t15 down (*10504.11*)
0101_{bin}	5_{dec}	CCW operation,	Fixed setpoint n1 (*P171*)	Ramps t15 up (*10504.1*), t15 down (*10504.11*)
0110_{bin}	6_{dec}	CW operation,	Fixed setpoint n2 (*P172*)	Ramps t15 up (*10504.1*), t15 down (*10504.11*)
0111_{bin}	7_{dec}	CCW operation,	Fixed setpoint n2 (*P172*)	Ramps t15 up (*10504.1*), t15 down (*10504.11*)
1000_{bin}	8_{dec}	CW operation,	Fixed setpoint n3 (*P173*)	Ramps t15 up (*10504.1*), t15 down (*10504.11*)
1001_{bin}	9_{dec}	CCW operation,	Fixed setpoint n3 (*P173*)	Ramps t15 up (*10504.1*), t15 down (*10504.11*)
1010_{bin}	10_{dec}	CW operation,	Fixed setpoint n4 (*10096.38*)	Ramps t15 up (*10504.1*), t15 down (*10504.11*)
1011_{bin}	11_{dec}	CCW operation,	Fixed setpoint n4 (*10096.38*)	Ramps t15 up (*10504.1*), t15 down (*10504.11*)
1100_{bin}	12_{dec}	CW operation,	Fixed setpoint n5 (*10096.39*)	Ramps t15 up (*10504.1*), t15 down (*10504.11*)
1101_{bin}	13_{dec}	CCW operation,	Fixed setpoint n5 (*10096.39*)	Ramps t15 up (*10504.1*), t15 down (*10504.11*)
1110_{bin}	14_{dec}	Brake release without drive enable (only if DIP switch S2/1 = "ON" or parameter *P738* = "ON")		
1111_{bin}	15_{dec}	Stop Reset (only effective in case of an error)		Stop ramp t13 (*P136*)

22167811/EN – 04/2016

Input data of MLK32A option → AS-Interface master

Function module 4_{hex} (AS-interface parameter bits = 100_{bin})				
Data bit				Function
DI3	DI2	DI1	DI0	
		0	0	MOVIMOT® is **not** ready. (Error message MOVIMOT® or 400/460/230-voltage supply not connected)
		1	0	MOVIMOT® is **not** ready. (Error message RS485 communication or 24 V supply of the MOVIMOT® inverter not connected)
		0	1	MOVIMOT® is ready. Control via AS-Interface.
		1	1	MOVIMOT® is ready. Control via manual mode.
	0			Signal of sensor 1 = "0".
	1			Signal of sensor 1 = "1".
0				Signal of sensor 2 = "0".
1				Signal of sensor 2 = "1".

INFORMATION

After the AS-Interface supply voltage is connected, the MOVIMOT® drive is not immediately ready for operation (DI3 = 0, DI2 = 0, DI1 = 0 und DI0 = 0).

Only after a few seconds does the MOVIMOT® inverter issue a ready signal (DI1 = 0 or 1 and DI0 = 1) or the AS-Interface option MLK recognizes that no communication to the MOVIMOT® inverter exists (DI1 = 1 and DI0 = 0).

After the AS-Interface master is switched on, the signals of sensors DI2 and DI3 are only available 500 ms after the communication to the MLK32A has been established.

22167811/EN – 04/2016

Function module 3_{hex}

The cyclic operation with function module 3_{hex} allows for selecting 3 fixed setpoints with ramps t16 up and t16 down as well as 3 fixed setpoints with ramps t15 up and t15 down.

The output data bits are binary coded and interpreted as 16 different control codes.

The output and input data bits are assigned the following functions:

Output data AS-Interface master → MLK3.A option

Function module 3_{hex} (AS-interface parameter bits = 011_{bin})				
Data bit		**Function**		
bin.	**dec.**			
0000_{bin}	0_{dec}	Stop		Stop ramp t13 (*P136*)
0001_{bin}	1_{dec}	Stop/inhibit		Ramp t16 down (*10475.1*)
0010_{bin}	2_{dec}	CW operation,	Fixed setpoint n0 (*P170*)	Ramps t16 up (*10475.2*), t16 down (*10475.1*)
0011_{bin}	3_{dec}	CCW operation,	Fixed setpoint n0 (*P170*)	Ramps t16 up (*10475.2*), t16 down (*10475.1*)
0100_{bin}	4_{dec}	CW operation,	Fixed setpoint n1 (*P171*)	Ramps t16 up (*10475.2*), t16 down (*10475.1*)
0101_{bin}	5_{dec}	CCW operation,	Fixed setpoint n1 (*P171*)	Ramps t16 up (*10475.2*), t16 down (*10475.1*)
0110_{bin}	6_{dec}	CW operation,	Fixed setpoint n2 (*P172*)	Ramps t16 up (*10475.2*), t16 down (*10475.1*)
0111_{bin}	7_{dec}	CCW operation,	Fixed setpoint n2 (*P172*)	Ramps t16 up (*10475.2*), t16 down (*10475.1*)
1000_{bin}	8_{dec}	CW operation,	Fixed setpoint n3 (*P173*)	Ramps t15 up (*10504.1*), t15 down (*10504.11*)
1001_{bin}	9_{dec}	CCW operation,	Fixed setpoint n3 (*P173*)	Ramps t15 up (*10504.1*), t15 down (*10504.11*)
1010_{bin}	10_{dec}	CW operation,	Fixed setpoint n4 (*10096.38*)	Ramps t15 up (*10504.1*), t15 down (*10504.11*)
1011_{bin}	11_{dec}	CCW operation,	Fixed setpoint n4 (*10096.38*)	Ramps t15 up (*10504.1*), t15 down (*10504.11*)
1100_{bin}	12_{dec}	CW operation,	Fixed setpoint n5 (*10096.39*)	Ramps t15 up (*10504.1*), t15 down (*10504.11*)
1101_{bin}	13_{dec}	CCW operation,	Fixed setpoint n5 (*10096.39*)	Ramps t15 up (*10504.1*), t15 down (*10504.11*)
1110_{bin}	14_{dec}	Stop/inhibit		Ramp t15 down (*10504.11*)
1111_{bin}	15_{dec}	Stop Reset (only effective in case of an error)		Stop ramp t13 (*P136*)

22167811/EN – 04/2016

Input data of MLK32A option → AS-Interface master

Function module 3_{hex} (AS-interface parameter bits = 011_{bin})				
Data bit				Function
DI3	DI2	DI1	DI0	
		0	0	MOVIMOT® is **not** ready. (Error message MOVIMOT® or 400/460/230-voltage supply not connected)
		1	0	MOVIMOT® is **not** ready. (Error message RS485 communication or 24 V supply of the MOVIMOT® inverter not connected)
		0	1	MOVIMOT® is ready. Control via AS-Interface.
		1	1	MOVIMOT® is ready. Control via manual mode.
	0			Signal of sensor 1 = "0".
	1			Signal of sensor 1 = "1".
0				Signal of sensor 2 = "0".
1				Signal of sensor 2 = "1".

INFORMATION

After the AS-Interface supply voltage is connected, the MOVIMOT® drive is not immediately ready for operation (DI3 = 0, DI2 = 0, DI1 = 0 und DI0 = 0).

Only after a few seconds does the MOVIMOT® inverter issue a ready signal (DI1 = 0 or 1 and DI0 = 1) or the AS-Interface option MLK recognizes that no communication to the MOVIMOT® inverter exists (DI1 = 1 and DI0 = 0).

After the AS-Interface master is switched on, the signals of sensors DI2 and DI3 are only available 500 ms after the communication to the MLK32A has been established.

22167811/EN – 04/2016

Function module 1_{hex}

Cyclic operation with function module 1_{hex} allows for selecting 6 fixed setpoints and for extended fault diagnosis.

The output data during the operation with function module 1_{hex} correspond to the output data during operation with function module 5_{hex}. The input data during operation with function module 1_{hex} are interpreted as different status codes.

Output data AS-Interface master → MLK3.A option

Function module 1_{hex} (AS-interface parameter bits = 001_{bin})				
Data bit		**Function**		
bin.	**dec.**			
0000_{bin}	0_{dec}	Stop		Stop ramp t13 (*P136*)
0001_{bin}	1_{dec}	Stop/inhibit		Ramp t11 down (*P131)*
0010_{bin}	2_{dec}	CW operation,	Fixed setpoint n0 (*P170*)	Ramp t11 up (*P130)*, t11 down (*P131)*
0011_{bin}	3_{dec}	CCW operation,	Fixed setpoint n0 (*P170*)	Ramp t11 up (*P130)*, t11 down (*P131)*
0100_{bin}	4_{dec}	CW operation,	Fixed setpoint n1 (*P171*)	Ramp t11 up (*P130)*, t11 down (*P131)*
0101_{bin}	5_{dec}	CCW operation,	Fixed setpoint n1 (*P171*)	Ramp t11 up (*P130)*, t11 down (*P131)*
0110_{bin}	6_{dec}	CW operation,	Fixed setpoint n2 (*P172*)	Ramp t11 up (*P130)*, t11 down (*P131)*
0111_{bin}	7_{dec}	CCW operation,	Fixed setpoint n2 (*P172*)	Ramp t11 up (*P130)*, t11 down (*P131)*
1000_{bin}	8_{dec}	CW operation,	Fixed setpoint n3 (*P173*)	Ramp t11 up (*P130)*, t11 down (*P131)*
1001_{bin}	9_{dec}	CCW operation,	Fixed setpoint n3 (*P173*)	Ramp t11 up (*P130)*, t11 down (*P131)*
1010_{bin}	10_{dec}	CW operation,	Fixed setpoint n4 (*10096.38*)	Ramp t11 up (*P130)*, t11 down (*P131)*
1011_{bin}	11_{dec}	CCW operation,	Fixed setpoint n4 (*10096.38*)	Ramp t11 up (*P130)*, t11 down (*P131)*
1100_{bin}	12_{dec}	CW operation,	Fixed setpoint n5 (*10096.39*)	Ramp t11 up (*P130)*, t11 down (*P131)*
1101_{bin}	13_{dec}	CCW operation,	Fixed setpoint n5 (*10096.39*)	Ramp t11 up (*P130)*, t11 down (*P131)*
1110_{bin}	14_{dec}	Brake release without drive enable (only if DIP switch S2/1 = "ON" or parameter *P738* = "ON")		
1111_{bin}	15_{dec}	Stop Reset (only effective in case of an error)		Stop ramp t13 (*P136*)

22167811/EN – 04/2016

Input data of MLK32A option → AS-Interface master

Function module 1_{hex} (AS-interface parameter bits = 001_{bin})			
Data bit		**Function**	
bin.	**dec.**		
0000_{bin}	0_{dec}	MOVIMOT® is **not** ready. (Error message MOVIMOT® or 400/460/230-voltage supply not connected)	
0001_{bin}	1_{dec}	Ready for operation – automatic mode	
0010_{bin}	2_{dec}	Ready -for operation – manual mode	
0011_{bin}	3_{dec}	Enable/motor running – automatic mode	
0100_{bin}	4_{dec}	Enable/motor running – manual mode	
0101_{bin}	5_{dec}	MOVIMOT® is **not** ready. (Error message RS485 communication or 24 V supply not connected)	
0110_{bin}	6_{dec}	Reserved	
0111_{bin}	7_{dec}	Reserved	
1000_{bin}	8_{dec}	Error, DC link voltage too high	Error code 07
1001_{bin}	9_{dec}	Phase failure error	Error code 06
1010_{bin}	10_{dec}	Error, overcurrent output stage	Error code 01
1011_{bin}	11_{dec}	Error, thermal overload output stage	Error code 11
1100_{bin}	12_{dec}	Error, thermal overload motor	Error code 84
1101_{bin}	13_{dec}	Error, thermal overload brake coil	Error code 89
1110_{bin}	14_{dec}	Speed monitoring error	Error code 08
1111_{bin}	15_{dec}	Other error	

INFORMATION

After the AS-Interface supply voltage is connected, the MOVIMOT® drive is not immediately ready for operation (0000_{bin}).

Only after a few seconds does the MOVIMOT® inverter issue a ready signal (0001_{bin} or 0010_{bin}) or the AS-Interface option MLK recognizes that no communication to the MOVIMOT® inverter exists (0000_{bin}).

22167811/EN – 04/2016

11 Operation

11.1 Operating display

The following figure shows the positions of the status and AS-Interface LEDs on the MOVIMOT® drive:

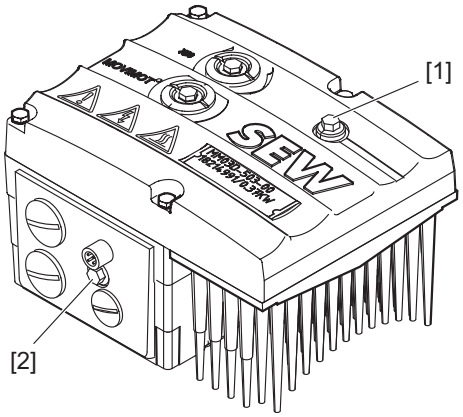

9007200399453707

[1] MOVIMOT® status LED
[2] AS-Interface LED

22167811/EN – 04/2016

11.1.1 Meaning of the AS-Interface LED

The AS-Interface LED signalizes the status of the AS-Interface slaves.

MLK30A, MLK32A

LED Color State	Meaning Operating state	Possible cause
Off	Not ready	Supply voltage at AS-Interface connection missing.
Green Steady light	Ready	Normal mode Supply voltage at AS-Interface connection is OK. Communication established.
Red Steady light	Not ready	Communication is interrupted or slave address set to 0.

MLK31A

LED Color State	Meaning Operating state	Possible cause
Off	Not ready	Supply voltage at AS-Interface connection missing.
Green Steady light	Ready	Normal mode Supply voltage at AS-Interface connection is OK. Communication established.
Red Steady light	Not ready	Communication error at A- or B-slave.
Red Flashing steadily	Not ready	Protocol error No CTT3 communication with A-slave or not CTT2 communication with B-slave.
Red/Yellow Flashing steadily	Not ready	Slave address = 0

22167811/EN – 04/2016

11.1.2 Meaning of the status LED states

The 3-color status LED indicates the operating and error states of the MOVIMOT® inverter.

LED color status	Meaning of operating state	Possible cause
Off	Not ready	No 24 V power supply.
Yellow Flashing steadily	Not ready	Self-test phase active or 24 V power supply present but line voltage is not OK.
Yellow Flashing evenly, fast	Ready	Releasing the brake without drive enable active (only with S2/2 = "ON").
Yellow Steady light	Ready but unit inhibited	24 V supply and line voltage OK, but no enable signal. If drive does not run when enable signal is present, check startup.
Yellow 2 x flashing, pause	Ready, manual mode without unit enable	24 V power supply and line voltage OK. Stop manual mode to activate automatic mode.
Yellow/green Flashing with alternating colors	Ready for operation, but timeout	Communication is interrupted during cyclical data exchange.
Green Steady light	Unit enabled	Motor is in operation.
Green Flashing evenly, fast	Current limit active	Drive operating at current limit.
Green Flashing steadily	Ready	Standstill current function active.
Green/Red/Green Flashing with alternating colors, pause	Localization function active	Localization function was activated. See parameter 590.
Red Steady light	Not ready	Check 24 V supply. A smoothed DC voltage with a maximum residual ripple of 13% must be present.

Blink codes of the status LED

Flashing steadily:	LED 600 ms on, 600 ms off
Flashing steadily, fast:	LED 100 ms on, 300 ms off
Flashing with alternating colors:	LED 600 ms green, 600 ms yellow
Flashing with alternating colors, pause:	LED 100 ms green, 100 ms red, 100 ms green, 300 ms pause

Refer to chapter "Meaning of the status LED" (→ 🗎 229) for a detailed description of the fault states.

22167811/EN – 04/2016

11.2 Drive ID module

The pluggable Drive ID module is installed in the basic unit.

The following figure shows the Drive ID module and its position in the MOVIMOT® inverter.

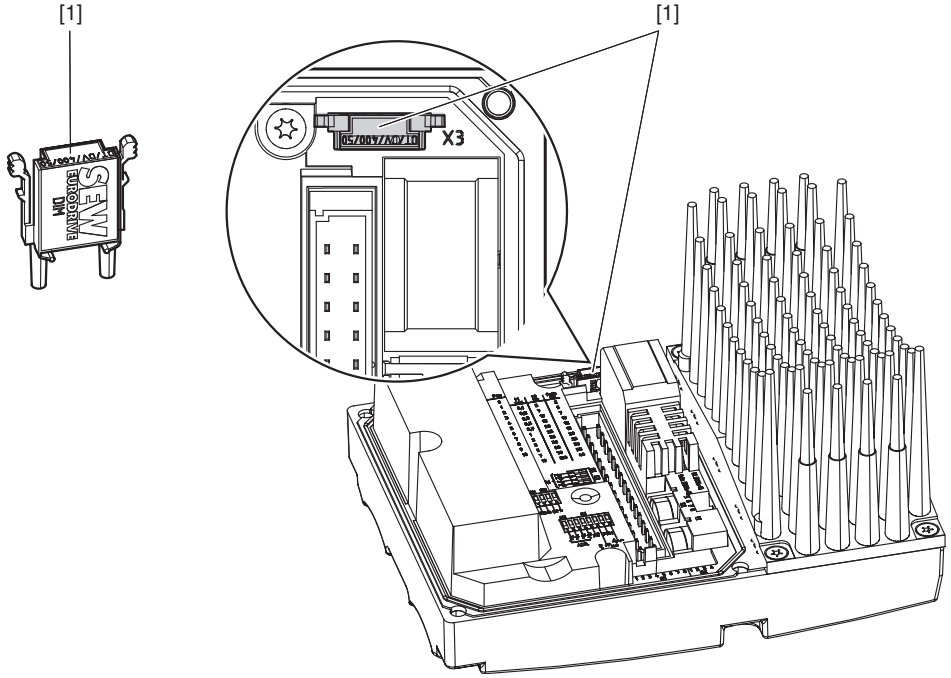

631655819

[1] Drive ID module

The Drive ID module receives a memory module on which the following information is stored:

- Motor data
- Brake data
- User parameters

If a MOVIMOT® inverter has to be replaced, you can re-startup the system by simply re-plugging the Drive ID module without a PC/laptop or data backup.

If, during a unit replacement

- the DIP switch setting is not transmitted correctly,
- or a MOVIMOT® inverter with a different part number is used (e.g. with a different device power),

the MOVIMOT® inverter detects a change in configuration. This may reinitialize certain startup parameters.

This is why the MOVIMOT® inverter must only be replaced with a MOVIMOT® inverter with the same part number.

For information regarding unit replacement, refer to chapter "Unit replacement" (→ 🗎 238).

22167811/EN – 04/2016

11.3 MOVIMOT® manual mode with MOVITOOLS® MotionStudio

MOVIMOT® drives are equipped with an X50 diagnostic interface for startup and service. It can be used for diagnostics, manual operation and parameterization.

For manual operation of the MOVIMOT® drive, you can use the manual mode function of the MOVITOOLS® MotionStudio software.

1. Firstly connect the PC/laptop to the MOVIMOT® inverter.

   See chapter "PC/laptop connection" (→ 🗎 64).

2. Start the software MOVITOOLS® MotionStudio and integrate the MOVIMOT® inverter in MOVITOOLS® MotionStudio.

   See chapter "MOVITOOLS® MotionStudio" (→ 🗎 99).

3. Once the MOVIMOT® inverter is successfully integrated, open the context menu by clicking on the right mouse button and select the menu item "Startup" > "Manual mode".

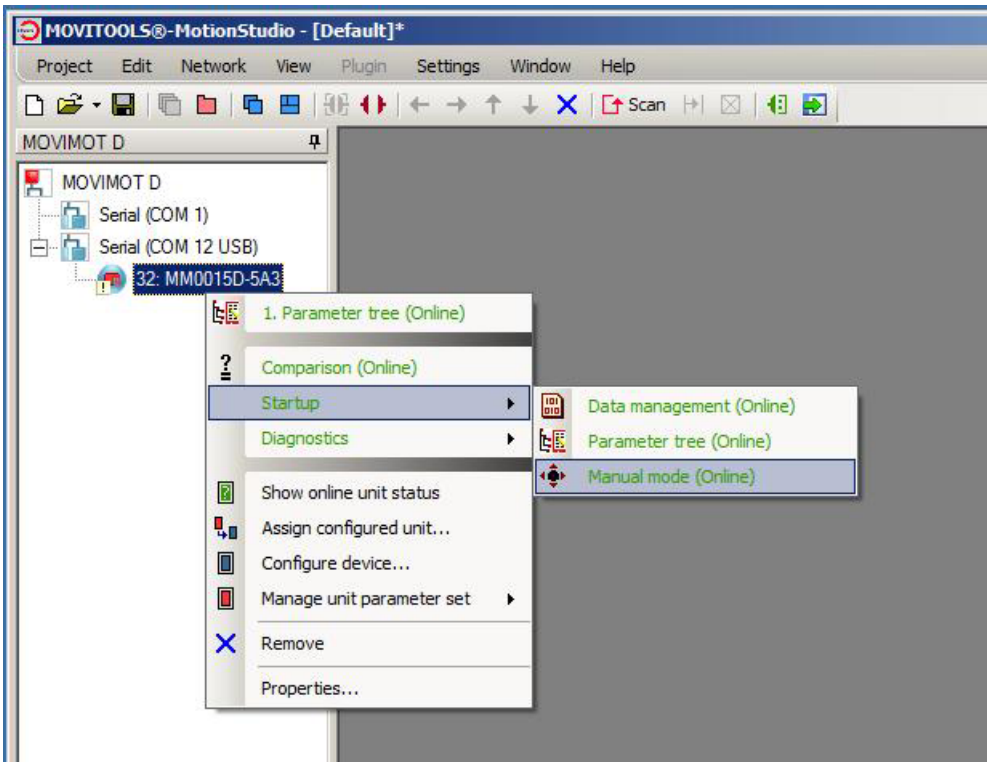

18014399048546059

11.3.1 Activating / deactivating manual mode

Activation

Manual mode can only be activated when the MOVIMOT® drive is inhibited.

It **cannot** be activated if

- the brake is released without drive enable
- or if the inverter output stage is enabled to supply a standstill current.

22167811/EN – 04/2016

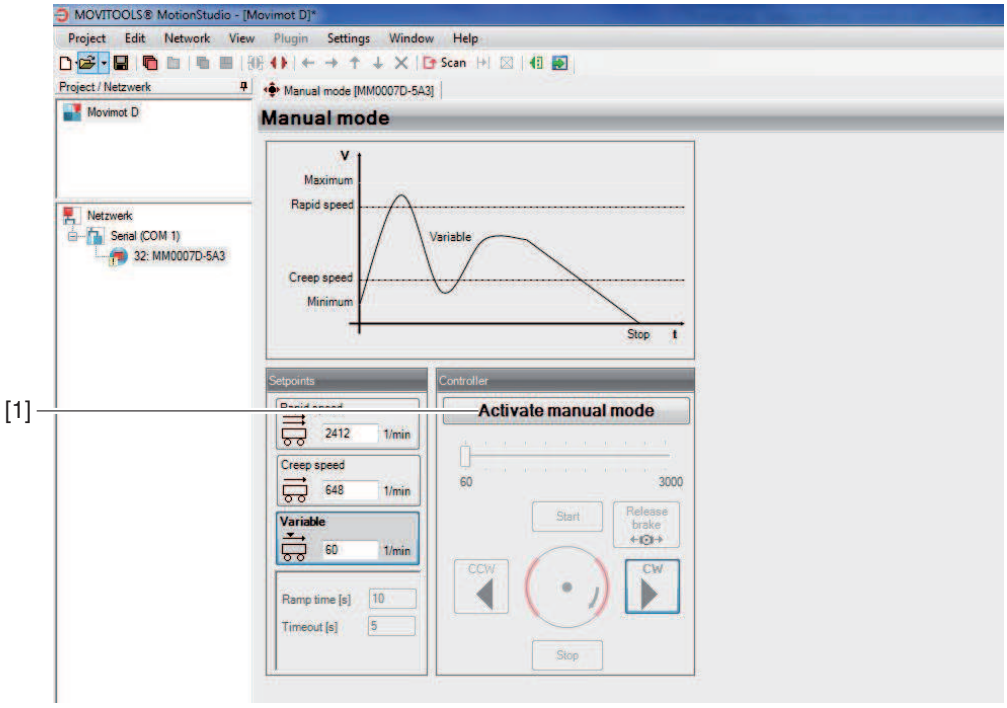

9007199789099787

To activate manual mode, click on the button [Activate manual mode] [1].

The AS-Interface bit DI1 sends a signal to the higher-level controller, indicating that manual mode has been activated (with MLK31A/MLK32A see also chapter "Function modules").

Manual operation remains active even after an error reset or after the 24 V supply has been switched off.

Deactivation

⚠ WARNING

Risk of crushing if the drive starts up unintentionally.

Severe or fatal injuries.

- Prior to deactivating the manual mode, set the AS-Interface signals DO0 – DO3 to "0" to revoke the enable signal.
- Take additional safety precautions depending on the application to avoid injury to people and damage to machinery.

Manual mode is deactivated

- When you click on the [Deactivate manual mode] button
- Or when you close the "Manual mode" window
- Or set parameter *P802 factory setting* to "Delivery state".

INFORMATION

When you deactivate manual mode, the AS-Interface signals DO0 – DO3 take effect.

22167811/EN – 04/2016

11.3.2 Control in manual mode

Once manual operation has been successfully activated, you can control the MOVIMOT® drive using the controls in the "Manual operation" window of MOVITOOLS® MotionStudio.

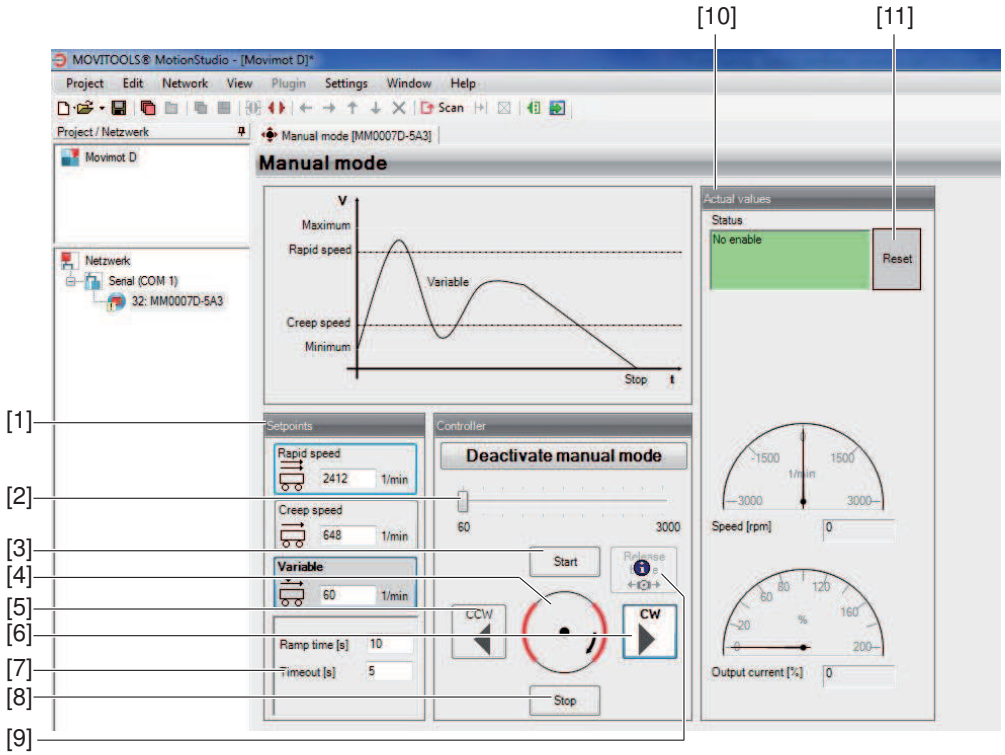

9007199789314827

1. Set the variable setpoint speed with the slide control [2] in the "Control" group.
2. Use the buttons [CW] [6] or [CCW] [5] to determine the direction of rotation.
3. Click on the [Start] button [3] to enable the MOVIMOT® drive.

   The motor axis [4] displayed in the "Control" group symbolizes the direction of rotation and the speed of the motor.
4. Use the [Stop] button [8] to stop the drive.

As an alternative, you can enter the setpoints for rapid and creep speed or the variable speed setpoint directly in the "Setpoints" group [1].

The direction of rotation is determined by the sign (positive = CW operation, negative = CCW operation).

Enter the respective setpoints. Press <ENTER> and click on the button that contains the setpoint input field to enable the MOVIMOT® drive.

The group "Actual values" [10] displays the following actual values of the MOVIMOT® drive:

- MOVIMOT® inverter status
- Motor speed in [rpm]
- Output current of the MOVIMOT® inverter in [%] of I_N

On MOVIMOT® drives with a brake, you can release the brake even without drive enable by activating the "Brake release" checkbox [9].

22167811/EN – 04/2016

INFORMATION

The brake can only be released without drive enable if:

- DIP switch S2/2 = "ON"
- or this function is enabled via parameter *P738*

11.3.3 Reset in manual mode

If an error occurs at the MOVIMOT® inverter, you can reset the error by clicking on the [Reset] button [11].

11.3.4 Timeout monitoring in manual mode

Timeout monitoring is active during manual operation to prevent uncontrolled operation of the MOVIMOT® drive in case of communication problems.

The timeout interval can be specified in the "Timeout" input field [7].

If communication between MOVITOOLS® MotionStudio and MOVIMOT® inverter is interrupted longer than this timeout interval,

- The enable signal for the MOVIMOT® drive unit is withdrawn
- And the brake is applied.

Manual operation remains active.

22167811/EN – 04/2016

11.4 DBG keypad (only in conjunction with MLK30A)

11.4.1 Description

Function

You can use the DBG keypad for parameterization and manual operation of MOVIMOT® drives. In addition to that, the keypad displays important information about the state of the MOVIMOT® drive.

Features

- Illuminated plain text display, up to 7 languages can be set
- Keypad with 21 keys
- Can be connected via extension cable DKG60B (5 m)

Overview

Keypad		Language
	DBG60B-01	DE, EN, FR, IT, ES, PT, NL (German, English, French, Italian, Spanish, Portuguese, Dutch)
	DBG60B-02	DE, EN, FR, FI, SV, DA, TR (German, English, French, Finnish, Swedish, Danish, Turkish)
	DBG60B-03	DE, EN, FR, RU, PL, CS (German, English, French, Russian, Polish, Czech)
	DBG60B-04	DE, EN, FR, ZH (German, English, French, Chinese)

For notes on connecting the DBG keypad, refer to chapter "Connection of DBG keypad" (→ 🗎 63).

NOTICE! Loss of warranted degree of protection if the screw plugs of the f1 setpoint potentiometer or the X50 diagnostic interface are installed incorrectly or not at all. Damage to the MOVIMOT® inverter.
Screw the screw plug back on with the seal after performing parameterization, diagnostics or manual operation.

22167811/EN – 04/2016

Key assignment DBG

The following figure shows the key assignment of the DBG keypad:

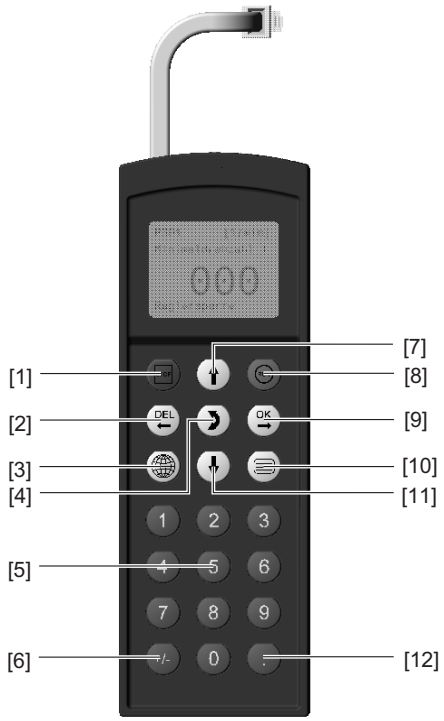

341827339

[1]	Button	STOP	Stop
[2]	Button	DEL	Delete previous entry
[3]	Button		Select the required language
[4]	Button		Change the menu
[5]	Button	<0> – <9>	Digits 0 – 9
[6]	Button	+/-	Changes signs
[7]	Button		Up arrow, moves up to the next menu item
[8]	Button	RUN	Start
[9]	Button	OK	OK, confirms the entry
[10]	Button		Calls up the context menu
[11]	Button		Down arrow, moves down to the next menu item
[12]	Button	.	Decimal point

22167811/EN – 04/2016

11.4.2 Operation

Selecting a language

1. The following text appears on the display for a few sections when the DBG keypad is switched on for the first time or after activating the delivery status:

The symbol for language selection then appears on the display.

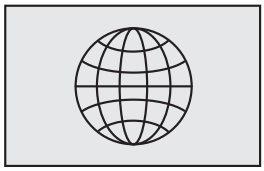

2. Press the key until the desired language appears.

Press the key to confirm your selection.

The DBG keypad searches for the connected units and displays them in the unit selection list.

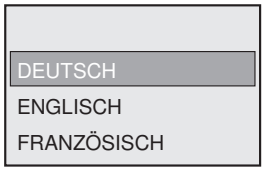

Context menu

Use the key to go to the context menu.

For the MOVIMOT® MM..D inverter with AS-Interface, the following menu items are available in the context menu of the DBG keypad:

- "BASIC VIEW"
- "PARAMETER MODE"
- "MANUAL MODE"
- "SCALING FACTOR"
- "COPY TO DBG"
- "COPY IN MM"
- "DBG DELIVERY ST."
- "UNIT SETTINGS"
- "SIGNATURE"
- "EXIT"

22167811/EN – 04/2016

Basic display

The menu "BASIC DISPLAY" represents important characteristic values.

0.0 Hz 0 %In NO ENABLE	Display for inhibited MOVIMOT® inverter
2.8 Hz 53 %In ENABLE	Display for enabled MOVIMOT® inverter
NOTE 17: DISABLE REQUIRED	Information message
0.0 Hz 0 %In ERROR 8	Error display

22167811/EN – 04/2016

Parameter mode

In the menu "PARAMETER MODE", you can check and change parameter settings.

INFORMATION

Parameters can only be changed if

- a Drive ID module is plugged into the MOVIMOT® inverter
- and no additional function is activated.

To change parameters in the parameter mode, proceed as follows:

1. Use the key to call up the context menu. The second menu item is "PARAMETER MODE".

```
--------------------------------
BASIC VIEW
PARAMETER MODE
MANUAL MODE
```

2. Press the key to select "PARAMETER MODE".

```
--------------------------------
BASIC VIEW
PARAMETER MODE
MANUAL MODE
```

3. Press the key to select "PARAMETER MODE". The first display parameter P000 "SPEED" appears.

   Use the or key to select main parameter groups 0 – 9.

```
P1.. SETPOINTS/
RAMP GENERATORS

NO ENABLE
```

4. Press the key to activate the parameter subgroup selection in the required main parameter group. The flashing cursor moves one position to the right.

```
P1.. SETPOINTS/
RAMP GENERATORS

NO ENABLE
```

5. Use the or key to select the desired parameter subgroup. The flashing cursor is positioned under the number of the parameter subgroup.

```
P13. SPEED
RAMPS 1

NO ENABLE
```

6. Press the key to activate the parameter selection in the required parameter subgroup. The flashing cursor moves one position to the right.

```
P13. SPEED
RAMPS 1

NO ENABLE
```

7. Use the or key to select the desired parameter. The flashing cursor is positioned under the third digit of the parameter number.

```
P131                    s
RAMP T11 DOWN
                    1.0

NO ENABLE
```

22167811/EN – 04/2016

8. Use the OK key to activate the setting mode for the selected parameter. The cursor is positioned under the parameter value.

```
P131                s
RAMP T11 DOWN
              1.0_

  NO ENABLE
```

9. Use the ↑ or ↓ key to set the required parameter value.

```
P131                s
RAMP T11 DOWN
              1.3_

  NO ENABLE
```

10. Press the OK key to confirm the setting. To exit the setting mode, press the ❯ key. The flashing cursor is positioned again under the third digit of the parameter number.

```
P131                s
RAMP T11 DOWN
              1.3

  NO ENABLE
```

11. Use the ↑ or ↓ key to select another parameter, or press the DEL key to switch to the menu of the parameter subgroups.
12. Use the ↑ or ↓ key to select another parameter subgroup or press the DEL key to switch to the menu of the main parameter groups.
13. Use the ≡ key to return to the context menu.

22167811/EN – 04/2016

Manual mode

Activation

⚠ WARNING

Risk of crushing if the drive starts up unintentionally. The AS-Interface signals take effect when the manual mode is deactivated. If the enable signal is present via the AS-Interface signals DO0 – DO3, the MOVIMOT® drive can start up unintentionally when deactivating manual operation.

- Set the AS-Interface signals DO0 – DO3 to "0" prior to deactivating manual mode. The MOVIMOT® drive is not ready for operation.
- Do not change the AS-Interface signals DO0 – DO3 until after you have deactivated the manual mode.

Proceed as follows to change to manual operation:

1. Use the key to switch to the context menu.
2. Use the or key to select the menu item "MANUAL MODE".

   Press the OK key to confirm your selection.

The keypad is now in manual operation mode.

INFORMATION

You cannot change to manual mode when the drive is enabled or the brake is released.

Display in manual operation

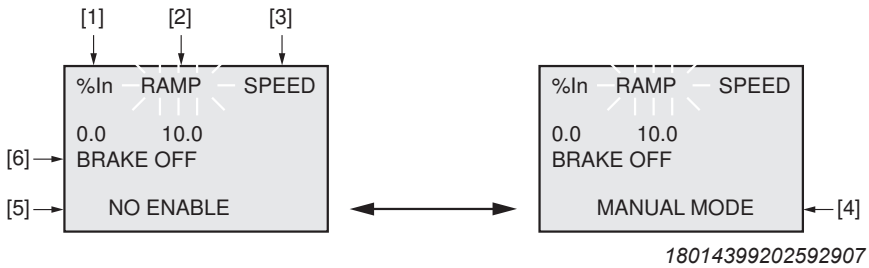

Display alternates every 2 s

[1] Output current in [%] of I_N
[2] Acceleration (speed ramps in [s] in relation to a setpoint step change of 1500 min^{-1}/50 Hz)
[3] Speed in [min^{-1}]
[4] Display in manual mode
[5] Inverter status
[6] Brake status

22167811/EN – 04/2016

Operation

The following MOVIMOT® function can be executed in the "MANUAL MODE" menu:

Setting the ramp time.	Press the OK key. Use the ↑ or ↓ key to set the required ramp time. Press the OK key to confirm your entry.
Changing parameters.	Use the key to switch between parameters "RAMP", "SPEED" and "BRAKE". Go to the "SPEED" parameter. The operator terminal shows the currently set "SPEED" parameter as flashing.
Enter speed.	Enter the desired speed for manual operation using the digit keys <0> – <9>. The sign determines the direction of rotation of the drive. Press the OK key to confirm your entry.
Starting the drive.	Use the RUN key to start the MOVIMOT® drive. During operation, the operator terminal displays the current motor current in [%] of the rated motor current I_N.
Stop drive.	Use the STOP key to stop the MOVIMOT® drive.
Releasing the brake without drive enable.	Press the key to switch to the "BRAKE" menu item. Use the ↑ key or the ↓ key to release or engage the brake without drive enable. Press the OK key to confirm your selection.
Reset error.	If an error occurs during manual operation, the display shows the following message:

MANUAL MODE <OK> = RESET <DEL> = EXIT ERROR CODE	↔	MANUAL MODE <OK> = RESET <DEL> = EXIT ERROR TEXT

Display alternates every 2 s

Press the OK key to have the DBG keypad reset the error.

22167811/EN – 04/2016

During the error reset, the following message is displayed:

```
MANUAL MODE
PLEASE WAIT...
```

After the error reset, manual mode remains active. The display shows the manual mode display again.

Deactivation

⚠ WARNING

Risk of crushing if the drive starts up unintentionally.

The AS-Interface signals take effect when the manual mode is deactivated. If the enable signal is present via the AS-Interface signals DO0 – DO3, the MOVIMOT® drive can start up unintentionally when deactivating manual operation.

- Set the AS-Interface signals DO0 – DO3 to "0" prior to deactivating manual mode. The MOVIMOT® drive is then not enabled.
- Do not change the AS-Interface signals DO0 – DO3 until after you have deactivated manual mode.

Use the ☰ or DEL key to deactivate manual mode.

The following query appears:

```
ACTIVATE
AUTOMATIC MODE ?

DEL=NO        OK=YES
```

- Press the DEL key to return to manual mode.
- Press the OK key to deactivate manual mode.

  The context menu appears.

22167811/EN – 04/2016

Scaling factors

Description:

Scaling factors are used for scaling the setpoint speeds F1.

The decimal values of the scaling factors are divisors of the setpoint speed F1.

Further, the setpoint depends on the setting of the setpoint potentiometer f1.

A scaling factor is only effective if it has been selected by setting the according parameter bits P3 – P0.

	Parameter bits			
	P3	**P2**	**P1**	**P0**
Scaling factor 0	0	0	0	0
Scaling factor 1	0	0	0	1
Scaling factor 2	0	0	1	0
.				
.				
.				
Scaling factor 14	1	1	1	0
Scaling factor 15	1	1	1	1

Example:

- F1 = 3000 min^{-1} (setpoint potentiometer f1 is in position 10)
- Parameter bits P3 – P0 = 0 0 0 0

  i.e. scaling factor 0 is effective.
- Scaling factor 0 = 20 (see the following pages for the setting)

=> setpoint speed of the drive = 3000 min^{-1} / 20 = 150 min^{-1}

22167811/EN – 04/2016

Upload/download/reset:

1. Use the key to call up the context menu.

```
--------------------------------
BASIC VIEW
PARAMETER MODE
MANUAL MODE
```

2. Press the key to select the "SCALING FACTORS" menu item.

```
MANUAL MODE
SCALING FACTORS
COPY TO DBG
COPY TO MM
```

3. Use the key to start the scaling factor mode.

```
SCALING FACTORS
UPLOAD
DOWNLOAD
RESET
```

   "UPLOAD"

   Use the key or the key to select "UPLOAD" in order to load the scaling factors from the MOVIMOT® inverter to the DBG operator terminal.

   "DOWNLOAD"

   Use the key or the key to select "DOWNLOAD" in order to load the scaling factors from DBG operator terminal to the MOVIMOT® inverter.

   "RESET"

   Use the key or the key to select "RESET" in order to restore the default values for the scaling factors.

   Confirm your selection with .

4. Use the key to return to the context menu.

22167811/EN – 04/2016

Setting

Proceed as follows to change the scaling factors of the setpoint speed:

1. Use the key to call up the context menu.

```
--------------------------------
BASIC VIEW
PARAMETER MODE
MANUAL MODE
```

2. Use the key or the key to select "SCALING FACTORS".

   Use the key to start the scaling factor mode.

```
MANUAL MODE
SCALING FACTORS
COPY TO DBG
COPY TO MM
```

3. Use the key or the key to select "SCALING FACTORS".

   Use the key to start the mode for the scaling factor selection.

```
SCALING FACTORS
UPLOAD
DOWNLOAD
RESET
```

4. Use the or the key to select the desired scaling factor.

```
SCALING FACTORS

SCALING FACTOR 0
SCALING FACTOR 1
```

5. Use the key to activate the setting mode for the selected scaling factor. The selected scaling factor is displayed.

```
SCALING FACTOR 0
              20.000_
```

6. Use the or key to set the required scaling factor value.

   As an alternative, you can enter the value with the numeric keys <0> – <9>.

7. Press the key to confirm the setting. To exit the setting mode again, press the key.

8. Use the key or the key to select a different scaling factor or return to the context menu by pressing the key.

22167811/EN – 04/2016

Copy function of the DBG keypad

You can use the DBG keypad to copy the complete parameter set from one MOVIMOT® inverter to other MOVIMOT® inverters as follows:

Parameters can only be transferred between two identical MOVIMOT® drives (same inverter and same motor).

1. In the context menu, select the menu item "COPY TO DBG". Press the OK key to confirm your selection.
2. After the copying process, connect the DBG keypad to another MOVIMOT® inverter.
3. In the context menu, select the menu item "COPY TO MM". Press the OK key to confirm your selection.

22167811/EN – 04/2016

12 Service

12.1 Status and error display

The following figure shows the positions of the status and AS-Interface LEDs on the MOVIMOT® drive:

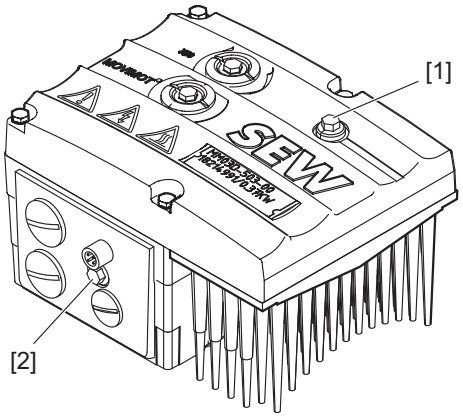

9007200399453707

[1] MOVIMOT® status LED
[2] AS-Interface LED

22167811/EN – 04/2016

12.1.1 Meaning of the AS-Interface LED

The AS-Interface LED signalizes the status of the AS-Interface slaves.

MLK30A, MLK32A

LED Color State	Meaning Operating state	Possible cause
Off	Not ready	Supply voltage at AS-Interface connection missing.
Green Steady light	Ready	Normal mode Supply voltage at AS-Interface connection is OK. Communication established.
Red Steady light	Not ready	Communication is interrupted or slave address set to 0.

MLK31A

LED Color State	Meaning Operating state	Possible cause
Off	Not ready	Supply voltage at AS-Interface connection missing.
Green Steady light	Ready	Normal mode Supply voltage at AS-Interface connection is OK. Communication established.
Red Steady light	Not ready	Communication error at A- or B-slave.
Red Flashing steadily	Not ready	Protocol error No CTT3 communication with A-slave or not CTT2 communication with B-slave.
Red/Yellow Flashing steadily	Not ready	Slave address = 0

22167811/EN – 04/2016

12.1.2 Meaning of the status LED

The status LED is located on the top of the MOVIMOT® inverter.

The 3-color status LED indicates the operating and error states of the MOVIMOT® inverter.

LED Color State	Meaning Operating state error code	Possible cause
Off	Not ready	No 24 V power supply.
Yellow Flashing steadily	Not ready	Self-test phase active or 24 V power supply present but line voltage is not OK.
Yellow Flashing steadily fast	Ready	Releasing the brake without drive enable active (only with S2/2 = "ON").
Yellow Steady light	Ready but unit inhibited	24 V power supply and line voltage is OK, but no enable signal. If the drive does not run when enable signal is present, check startup.
Yellow 2x flashing, pause	Ready, but manual mode without unit enable	24 V power supply and line voltage OK. Stop manual mode to activate automatic mode.
Yellow/green Flashing with alternating colors	Ready, but timeout	Communication is interrupted during cyclical data exchange.
Green Steady light	Unit enabled	Motor is in operation.
Green Flashing steadily fast	Current limit active	Drive operating at current limit.
Green Flashing steadily	Ready	Standstill current function active.
Green/Red/Green Flashing with alternating colors, pause	Localization function active	Localization function was activated. See parameter 590.
Red 2x flashing, pause	Fault 07	DC link voltage too high.

22167811/EN – 04/2016

LED Color State	Meaning Operating state error code	Possible cause
Red Flashing slowly	Fault 08	Speed monitoring error (only when S2/4 = "ON") or additional function 13 is active.
	Fault 09	Startup fault Additional functions 4, 5, 12 (DIP switches S2/5 – S2/8) are not permitted.
		Firmware does not support MLK..A option (only with MOVIMOT® with AS-Interface).
	Fault 15	24 V supply fault
	Faults 17 – 24, 37	CPU fault
	Faults 25, 94	EEPROM error
	Faults 38, 45	Unit/motor data error
	Fault 44	The current limit was exceeded for more than 500 ms. (only with additional function 2)
	Fault 90	Incorrect motor/inverter assignment.
	Fault 97	Error while transmitting a parameter set
Red 3x flashing, pause	Fault 01	Overcurrent in output stage
	Fault 11	Overtemperature in output stage
Red 4x flashing, pause	Fault 84	Motor overload
Red 5x flashing, pause	Fault 4	Brake chopper error
	Fault 89	Brake overtemperature Incorrect motor/frequency inverter assignment. At terminal X1:13– X1:15, both brake and braking resistor are connected. This is not permitted.
Red 6x flashing, pause	Fault 06	Line phase failure
	Fault 81	Start condition
	Fault 82	Output phases are interrupted.
Red Steady light	Not ready	Check 24 V supply. A smoothed DC voltage with a maximum residual ripple of 13% must be present.

Blink codes of the status LED

Flashing steadily:	LED 600 ms on, 600 ms off
Flashing steadily, fast:	LED 100 ms on, 300 ms off
Flashing with alternating colors:	LED 600 ms green, 600 ms yellow
Flashing with alternating colors, pause:	LED 100 ms green, 100 ms red, 100 ms green, 300 ms pause
N x flashing, break:	LED N x (600 ms red, 300 ms off), then LED off for 1 s

22167811/EN – 04/2016

12.2 Error list

The following table helps you with troubleshooting:

Code	Error	Possible cause	Measure
–	**Communication timeout** (motor stops, without error code)	Missing connection ⊥, RS +, RS- between MOVIMOT® and RS485 master	Check and establish connection, especially ground.
		EMC influence	Check shielding of data lines and improve, if necessary.
		Incorrect type (cyclical) for acyclical data traffic, protocol period between the individual messages is longer than the set timeout interval.	Check the number of MOVIMOT® drives connected to the master. If the timeout interval is 1 s, for example, you can connect a maximum of 8 MOVIMOT® drives as slaves for cyclical communication. Reduce message cycle, increase timeout interval, or select message type "acyclic".
–	**Supply voltage not present** (motor stops, without error code)	DC link voltage too low, Power off has been detected.	Check power cables and line voltage for interruption.
–	**24 V supply not present** (motor stops, without error code)	24 V supply voltage not present.	Check 24 V supply voltage for interruption. Check 24 V supply voltage. Permitted voltage: DC 24 V ± 25%, EN 61131-2, residual ripple max. 13% Motor restarts automatically as soon as the voltage reaches normal values.
		AUX power supply voltage not available (only for MOVIMOT® with AS-Interface).	Check AUX power supply voltage for interruption. Check AUX power supply voltage. Permitted voltage: DC 24 V ± 25%, EN 61131-2, residual ripple max. 13% Motor restarts automatically as soon as the voltage reaches normal values.
01	**Overcurrent in output stage**	Short circuit on inverter output	Check the connection between the inverter output and the motor as well as the motor winding for short circuits. Reset error.[1)]
04	**Brake chopper**	Overcurrent in brake output, resistor damaged, resistance too low	Check the connection of the resistor/replace it.
		Short circuit in brake coil	Replace brake.
06	**Phase failure** (The error can only be detected when the drive is under load)	Phase failure	Check the supply system cable for phase failure. Reset error[1)].

22167811/EN – 04/2016

Code	Error	Possible cause	Measure
07	**DC link voltage too high**	Ramp time too short.	Extend the ramp time. Reset error[1].
		Faulty connection between brake coil/braking resistor	Check the braking resistor/brake coil connection. Correct, if necessary. Reset error[1].
		Incorrect internal resistance of brake coil/braking resistor	Check internal resistance of brake coil/braking resistor (see operating instructions, chapter "Technical data"). Reset error[1].
		Thermal overload in braking resistor, wrong size of braking resistor selected	Dimension the braking resistor correctly. Reset error[1].
		Invalid voltage range of supply input voltage	Check supply input voltage for permitted voltage range. Reset error[1].
08	**Speed monitoring**	Speed deviation due to operation at the current limit	Reduce the load on the drive. Reset error[1].
09	**Startup**	Improper drive ID module for MOVIMOT® with 230 V supply	For MOVIMOT® with 230 V supply, not all drive ID modules are permitted (see operating instructions, chapter "Assignment of the drive ID module"). Check/correct the drive ID module.
		The additional functions 4, 5, 12 are not permitted for MOVIMOT® MM..D with AS-Interface.	Correct the settings of DIP switches S2/5 – S2/8.
		Firmware does not support MLK..A option (only with MOVIMOT® with AS-Interface).	Contact SEW-EURODRIVE Service.
11	**Thermal overload of the output stage or internal unit error**	Heat sink is dirty.	Clean the heat sink. Reset error[1].
		Ambient temperature too high.	Lower ambient temperature. Reset error[1].
		Heat build-up at MOVIMOT® drive.	Prevent heat build-up. Reset error[1].
		Drive load too high.	Reduce the load on the drive. Reset error[1].
15	**24 V monitoring**	Voltage dip in the 24 V supply	Check the 24 V supply. Reset error[1].
17 - 24 37	**CPU error**	CPU error	Reset error[1]. Contact SEW-EURODRIVE Service if the error re-occurs.

22167811/EN – 04/2016

Code	Error	Possible cause	Measure
25	**EEPROM error**	Error while accessing EEPROM	Set parameter *P802* to "Delivery state". Reset error[1)]. Re-parameterize MOVIMOT® inverter. Contact SEW-EURODRIVE Service if the error re-occurs.
26	**External terminal**	External signal at terminal X6: 9,10 **not** present.	Correct/reset external error.
38	**System software error**	Internal fault	Contact SEW-EURODRIVE Service.
43	**Communication timeout**	Communication timeout during cyclical communication via RS485. If this error occurs, the drive is decelerated and stopped along the set ramp.	Check/re-establish the communication link between the RS485 master and the MOVIMOT® inverter. **NOTICE!** The drive is enabled again after communication has been re-established.
			Check the number of slaves connected to the RS485 master. If the timeout interval of the MOVIMOT® inverter is set to 1 s, you can connect a maximum of 8 MOVIMOT® inverters (slaves) to the RS485 master for cyclical communication.
		Internal communication error (at MOVIMOT® MM..D with AS-Interface)	Contact SEW-EURODRIVE Service.
44	**Current limit exceeded**	The set current limit was exceeded for more than 500 ms. This error is only active with additional function 2. The status LED flashes red.	Reduce load or increase current limit at switch f2 (only with additional function 2).
81	**Start condition error**	The inverter could not be supplied with the correct amount of current during the premagnetization time. Rated motor power too small in relation to rated inverter power.	Check connection between MOVIMOT® inverter and motor.
82	**Output open error**	2 or all output phases interrupted.	Check connection between MOVIMOT® inverter and motor.
		Rated motor power too small in relation to rated inverter power.	Check the combination of motor and MOVIMOT® inverter.

22167811/EN – 04/2016

Code	Error	Possible cause	Measure
84	**Thermal overload of motor**	When the MOVIMOT® inverter is installed close to the motor, motor protection active.	Set DIP switch S1/5 to "ON". Reset error[1].
		The performance level is set incorrectly for the combination of MOVIMOT® inverter and motor.	Check the setting of DIP switch S1/6. Reset error[1].
		Ambient temperature too high.	Lower ambient temperature. Reset error[1].
		Heat build-up at MOVIMOT® drive.	Prevent heat build-up. Reset error[1].
		Motor load too high.	Reduce the load on the motor. Reset error[1].
		Speed too low.	Increase speed. Reset error[1].
		If the error is signaled just after the first enable signal.	Check the combination of motor and MOVIMOT® inverter. Reset error[1].
		The temperature monitoring in the motor (TH winding thermostat) has tripped when using a MOVIMOT® inverter with the selected extra function 5.	Reduce the load on the motor. Reset error[1].
89	**Brake overtemperature**	Thermal overload of brake coil	Extend the ramp time. Reset error[1].
		Brake coil is defective.	Contact SEW-EURODRIVE Service.
		Brake coil and braking resistor connected.	Connect either brake or braking resistor to drive.
		Inverter does not match the motor (only if error occurs after first enable).	Check the combination of motor (brake coil) and MOVIMOT® inverter. Check/correct the settings of DIP switches S1/6 and S2/1. Reset error[1].
90	**Output stage detection**	The inverter/motor combination is not permitted.	Check/correct the settings of DIP switches S1/6 and S2/1.
			Check/correct the connection type of the motor.
			Check whether the drive ID module fits the motor and is plugged in correctly.
			Use a MOVIMOT® inverter or motor with another power rating.

22167811/EN – 04/2016

Code	Error	Possible cause	Measure
91	**Communication timeout bus module – MOVIMOT®**	Timeout between the fieldbus interface and the MOVIMOT® inverter.	Check/re-establish the communication link between the fieldbus interface and the MOVIMOT® inverter. The fieldbus interface reports the error only to the higher-level controller.
94	**EEPROM checksum error**	Defective EEPROM.	Contact SEW-EURODRIVE Service.
97	**Copy error**	DBG keypad or PC/laptop disconnected during the copy process.	Before acknowledging the error, load the factory setting or the complete data set from the DBG keypad or the MOVITOOLS® MotionStudio software.
		Switching the 24 V voltage supply off and on during the copying process.	Before acknowledging the error, load the factory setting or the complete data set from the DBG keypad or the MOVITOOLS® MotionStudio software.

1) With standard MOVIMOT® units, reset the error by switching off the 24 V supply voltage or by error. With MOVIMOT® with AS-Interface, reset the error via the AS-Interface signals or by error reset via the diagnostics socket.

12.3 Inspection and maintenance

12.3.1 MOVIMOT® inverter

The MOVIMOT® inverter is maintenance-free. SEW-EURODRIVE does not prescribe any inspection or maintenance work for the MOVIMOT® inverter.

Exception: For extended storage, refer to the instructions in the "Service" > "Extended storage" chapter.

12.3.2 Motor

The motor requires regular inspection and maintenance work.

Observe the notes and instructions in chapter "Inspection/Maintenance" of the motor operating instructions.

12.3.3 Gear units (only for MOVIMOT® gearmotors)

The gear unit requires regular inspection and maintenance work.

Observe the notes and instructions in chapter "Inspection/Maintenance" of the gear unit operating instructions.

12.4 Diagnostics with MOVITOOLS® MotionStudio

MOVIMOT® drives with integrated AS-interface have a diagnostic interface for startup and service.

This interface allows for diagnostics using the software MOVITOOLS® MotionStudio.

22167811/EN – 04/2016

⚠ WARNING

Electric shock from capacitors that have not been fully discharged.

Severe or fatal injuries.

- Disconnect the inverter from the power. Observe the minimum switch-off time after disconnection from the supply system:
  - **1 minute**

⚠ WARNING

Danger of burns due to hot surfaces of the unit (e.g. the heat sink).

Serious injuries.

- Do not touch the unit until it has cooled down sufficiently.

1. Connect the PC/laptop or the DBG keypad to the MOVIMOT® inverter.

   See chapter "PC/laptop connection" (→ 🗎 64).
2. Connect the MOVIMOT® inverter to the voltage supply.
3. Start MOVITOOLS® MotionStudio.

   Integrate the MOVIMOT® inverter.

   See chapter "Integrating MOVIMOT® into the MOVITOOLS MotionStudio" (→ 🗎 100).
4. Open the context menu by clicking the right mouse button and select the menu item "Startup" > "Parameter tree".

   The following window is displayed during operation with the MLK30A option:

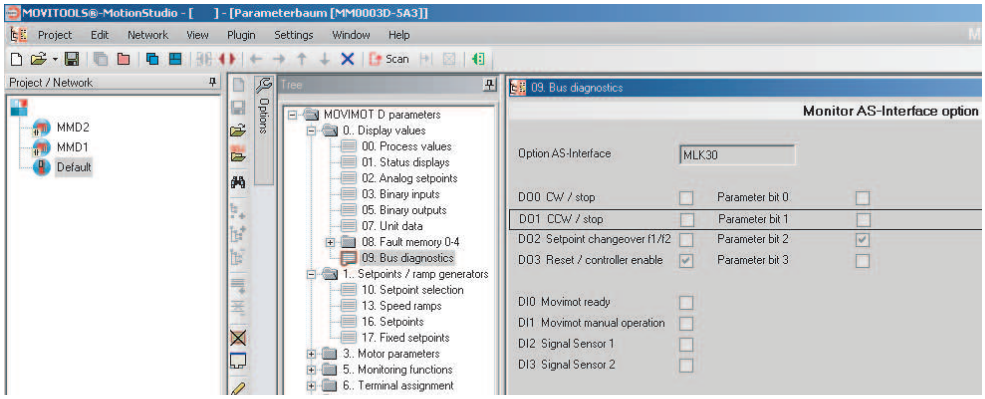

18014399876677515

5. The parameters *P094* and *P097* are used as bus monitor of the AS-Interface.

   This parameters show the transmission of the AS-Interface bits from and to the MOVIMOT® inverter.

The following table shows the assignment of AS-Interface output bits:

Index	Subindex	Bit	AS-Interface bit	Meaning with MLK30A[1)]
8455	0	9	DO0	CW operation/Stop
8455	0	10	DO1	CCW operation/Stop
8455	0	11	DO2	Speed f2/speed f1

22167811/EN – 04/2016

Index	Subindex	Bit	AS-Interface bit	Meaning with MLK30A[1)]
8455	0	6	DO3	Reset/controller enable
8455	0	12	P0	Parameter bit 0
8455	0	13	P1	Parameter bit 1
8455	0	14	P2	Parameter bit 2
8455	0	15	P3	Parameter bit 3

The following table shows the assignment of the AS-Interface input bits:

Index	Subindex	Bit	AS-Interface bit	Meaning with MLK30A[1)]
8458	0	0	DI0	Ready signal
8458	0	1	DI1	Automatic operation/manual operation
8455	0	2	DI2	Sensor input 1
8455	0	3	DI3	Sensor input 2

1) With the MLK31A or MLK32A option, the meaning of the AS-Interface bits is determined by the selected function modules.

For diagnostics purposes, the parameter tree provides additional data such as unit status, process data etc.

NOTICE! Loss of warranted degree of protection if the screw plugs of the f1 setpoint potentiometer or the X50 diagnostic interface are installed incorrectly or not at all. Damage to the MOVIMOT® inverter.
Make sure the screw plug of the setpoint potentiometer has a seal and screw it in.

22167811/EN – 04/2016

12.5 Unit replacement

⚠ WARNING

Electric shock from capacitors that have not been fully discharged.

Severe or fatal injuries.

- Disconnect the inverter from the power. Observe the minimum switch-off time after disconnection from the supply system:
  - **1 minute**

1. Remove the screws and take off the MOVIMOT® inverter from the connection box.
2. Compare the data on the nameplate of the previous MOVIMOT® inverter with the data on the nameplate of the new MOVIMOT® inverter.

INFORMATION

The MOVIMOT® inverter must only be replaced with a MOVIMOT® inverter with the same part number.

3. Set all control elements
   - DIP switch S1
   - DIP switch S2
   - Setpoint potentiometer f1
   - Switch f2
   - Switch t1

   on the new MOVIMOT® inverter analogously to the control elements of the previous MOVIMOT® inverter.
4. Unlock the drive ID module of the new MOVIMOT® inverter and pull it out carefully.

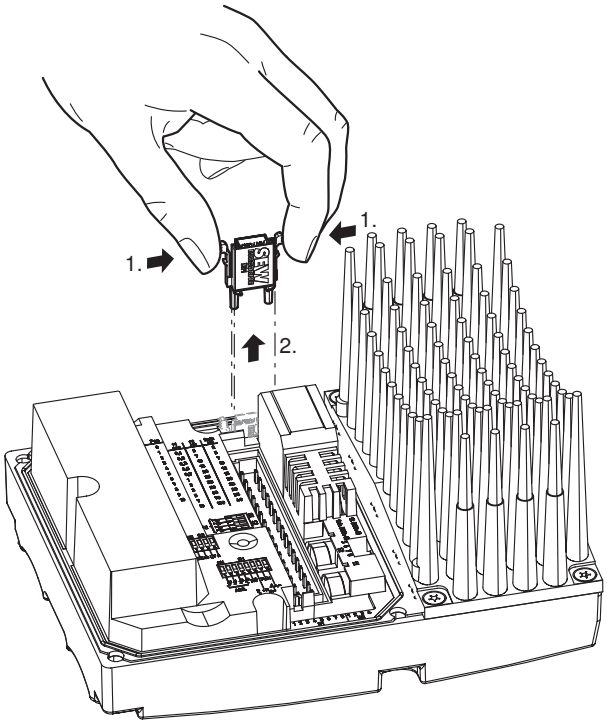

18014399028685579

22167811/EN – 04/2016

5. Unlock the drive ID module of the previous MOVIMOT® inverter as well and pull it out carefully.

   Insert this drive ID module into the new MOVIMOT® inverter.

   Make sure that the drive ID module locks in place.
6. Place the new MOVIMOT® inverter onto the connection box and screw it on.
7. Supply voltage to the MOVIMOT® inverter.

INFORMATION

When switching on the new inverter the first time after a unit replacement, the 24 V supply must be connected for at least 10 seconds without interruptions.

After the unit replacement, it can take up to 6 s before the MOVIMOT® inverter signals the ready signal.

8. Check whether the new MOVIMOT® inverter is functioning properly.

22167811/EN – 04/2016

12.6 SEW-EURODRIVE Service

If an error cannot be solved, please contact SEW-EURODRIVE Service (see "Address list"). When contacting SEW-EURODRIVE Service, always provide the following information:

- Service code [1]
- Type designation on inverter nameplate [2]
- Part number [3]
- Serial number [4]
- Type designation on motor nameplate [5]
- Serial number [6]
- Brief description of the application
- Type of error
- Accompanying circumstances (e.g. initial startup)
- Your own presumptions, unusual events, etc.

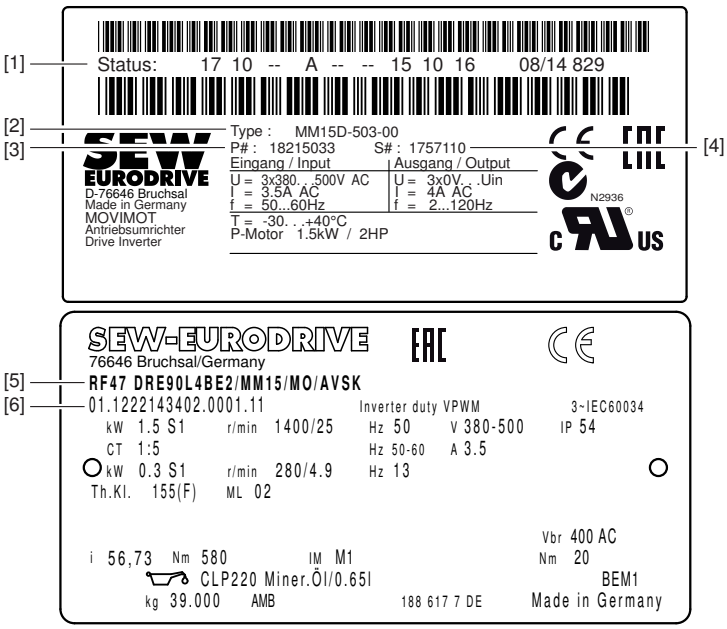

9007201212704651

12.7 Shutdown

To shut down the MOVIMOT® drive, de-energize the drive using appropriate measures.

⚠ WARNING

Electric shock from capacitors that have not been fully discharged.

Severe or fatal injuries.

- Disconnect the inverter from the power. Observe the minimum switch-off time after disconnection from the supply system:
  - **1 minute**

22167811/EN – 04/2016

12.8 Storage

Observe the following instructions when shutting down or storing MOVIMOT® drive:

- If you shut down and store the MOVIMOT® drive for a longer period, you must close open cable bushings and cover ports with protective caps.
- Ensure that the unit is not subject to mechanical impact during storage.

Observe the guidelines on storage temperature in the "Technical data" section.

12.9 Extended storage

If the unit is stored for a long time, connect it to the power supply for at least 5 minutes every 2 years. Otherwise, the unit's service life may be reduced.

12.9.1 Procedure when maintenance has been neglected

Electrolytic capacitors are used in the inverters. They are subject to aging effects when deenergized. This effect can damage the capacitors if the unit is connected directly to the nominal voltage after a longer period of storage.

If you have not performed maintenance regularly, SEW-EURODRIVE recommends that you increase the line voltage slowly up to the maximum voltage. This can be done, for example, by using a variable transformer for which the output voltage has been set according to the following overview. After you have completed the regeneration process, the unit can be used immediately or stored again for an extended period with maintenance.

The following stages are recommended:

AC 400 / 500 V units:

- Stage 1: AC 0 V to AC 350 V within a few seconds
- Stage 2: AC 350 V for 15 minutes
- Stage 3: AC 420 V for 15 minutes
- Stage 4: AC 500 V for 1 hour

12.10 Waste disposal

This product consists of:

- Iron
- Aluminum
- Copper
- Plastic
- Electronic components

Dispose of all components in accordance with applicable regulations.

22167811/EN – 04/2016

13 Technical data

13.1 Motor with operating point 400 V/50 Hz or 400 V/100 Hz

MOVIMOT® type		**MM 03D-503-00**	**MM 05D-503-00**	**MM 07D-503-00**	**MM 11D-503-00**	**MM 15D-503-00**	**MM 22D-503-00**	**MM 30D-503-00**	**MM 40D-503-00**
Part number		**1821 4991**	**1821 5009**	**1821 5017**	**1821 5025**	**1821 5033**	**1821 5041**	**1821 5068**	**1821 5076**
Size		**1**					**2**		**2L**
Apparent output power at V_{line} = AC 380 – 500 V	S_N	1.1 kVA	1.4 kVA	1.8 kVA	2.2 kVA	2.8 kVA	3.8 kVA	5.1 kVA	6.7 kVA
Connection voltages	V_{line}	3x AC 380 V/**400 V**/415 V/460 V/500 V							
Permitted range		V_{Line} = 3x AC 380 V -10% – AC 500 V +10%							
Line frequency	f_{line}	50 – 60 Hz ±10%							
Nominal line current at V_{line} = AC 400 V	I_{line}	AC 1.3 A	AC 1.6 A	AC 1.9 A	AC 2.4 A	AC 3.5 A	AC 5.0 A	AC 6.7 A	AC 7.3 A
Output voltage	V_O	0 – V_{line}							
Output frequency	f_A	2 – 120 Hz							
Resolution		0.01 Hz							
Operating point		400 V at 50/100 Hz							
Nominal output current	I_N	AC 1.6 A	AC 2.0 A	AC 2.5 A	AC 3.2 A	AC 4.0 A	AC 5.5 A	AC 7.3 A	AC 8.7 A
Motor power S1	P_{Mot}	**0.37 kW** 0.5 HP	**0.55 kW** 0.75 HP	**0.75 kW** 1.0 HP	**1.1 kW** 1.5 HP	**1.5 kW** 2.0 HP	**2.2 kW** 3.0 HP	**3.0 kW** 4.0 HP	**4.0 kW** 5.4 HP
PWM frequency		4 (factory setting)/8/16 kHz [1)]							
Current limiting	I_{max}	Motor mode: 160% for ⅄ and △ Regenerative operation: 160% for ⅄ and △							
Maximum motor cable length		15 m when MOVIMOT® inverter is mounted close to the motor (with SEW-EURODRIVE hybrid cable)							

22167811/EN – 04/2016

MOVIMOT® type		MM 03D-503-00	MM 05D-503-00	MM 07D-503-00	MM 11D-503-00	MM 15D-503-00	MM 22D-503-00	MM 30D-503-00	MM 40D-503-00
Part number		1821 4991	1821 5009	1821 5017	1821 5025	1821 5033	1821 5041	1821 5068	1821 5076
Size		1					2		2L
External braking resistor	R_{min}	150 Ω					68 Ω		
Interference immunity		Complies with EN 61800-3							
Interference emission		Complies with category C2 according to EN 61800-3 (limit class A to EN 55011 and EN 55014)							
Ambient temperature	ϑ_A	-25 to +40 °C depending on the motor P_N reduction: 3% I_N per K to max. 60 °C							
Climate class		EN 60721-3-3, class 3K3							
Storage temperature[2)]		-30 to +85 °C (EN 60721-3-3, class 3K3)							
Maximum permitted vibration and shock load		According to EN 61800-5-1							
Degree of protection (depending on the motor)		IP54, IP55, IP65, IP66 (options, specify when ordering) (Connection box closed and all cable entries sealed, the degree of protection of the MOVIMOT® drive decreases with a lower degree of protection of the motor)							
Operating mode		S1, S3 max. cycle duration 10 minutes (EN 60034-1)							
Type of cooling		Natural cooling (DIN 41751)							
Installation altitude		h ≤ 1,000 m: No reduction h > 1000 m: I_N reduction by 1% per 100 m. h > 2000 m: V_{line} reduction by AC 6 V per 100 m, overvoltage class 2 according to EN 60664-1 h_{max} = 4000 m See also chapter "Installation above 1000 m amsl" (→ 🗎 42).							
Weight		See "MOVIMOT® gearmotors" catalog							
Dimensions, dimension drawings									
Output torque ratings									
Required preventive measures		Grounding the unit							

1) 16 kHz PWM frequency (low-noise): When DIP SWITCH S1/7 is set to ON, the units operate at a PWM frequency of 16 kHz (low noise) and switch back in steps to lower switching frequencies depending on the heat sink temperature and the load.
2) If the unit is stored for a long time, connect it to the line voltage for at least 5 minutes every 2 years. Otherwise, the service life of the unit may be reduced.

22167811/EN – 04/2016

13.2 Motor with operating point 460 V/60 Hz

MOVIMOT® type		MM 03D-503-00	MM 05D-503-00	MM 07D-503-00	MM 11D-503-00	MM 15D-503-00	MM 22D-503-00	MM 30D-503-00	MM 40D-503-00
Part number		**1821 4991**	**1821 5009**	**1821 5017**	**1821 5025**	**1821 5033**	**1821 5041**	**1821 5068**	**1821 5076**
Size		**1**					**2**		**2L**
Apparent output power at V_{line} = AC 380 – 500 V	S_N	1.1 kVA	1.4 kVA	1.8 kVA	2.2 kVA	2.8 kVA	3.8 kVA	5.1 kVA	6.7 kVA
Connection voltages **Permitted range**	V_{line}	3x AC 380 V/400 V/415 V/**460 V**/500 V V_{line} = 3x AC 380 V -10% – AC 500 V +10%							
Line frequency	f_{line}	50 – 60 Hz ±10%							
Nominal line current at V_{line} = AC 460 V	I_{line}	AC 1.1 A	AC 1.4 A	AC 1.7 A	AC 2.1 A	AC 3.0 A	AC 4.3 A	AC 5.8 A	AC 6.9 A
Output voltage	V_O	0 – V_{line}							
Output frequency **Resolution** **Operating point**	f_A	2 – 120 Hz 0.01 Hz 460 V at 60 Hz							
Nominal output current	I_N	AC 1.6 A	AC 2.0 A	AC 2.5 A	AC 3.2 A	AC 4.0 A	AC 5.5 A	AC 7.3 A	AC 8.7 A
Motor power	P_{Mot}	**0.37 kW** 0.5 HP	**0.55 kW** 0.75 HP	**0.75 kW** 1.0 HP	**1.1 kW** 1.5 HP	**1.5 kW** 2.0 HP	**2.2 kW** 3.0 HP	**3.7 kW** 5.0 HP	**4 kW** 5.4 HP
PWM frequency		4 (factory setting)/8/16 kHz [1)]							
Current limiting	I_{max}	Motor mode: 160% for ⅄ and △ Regenerative operation: 160% for ⅄ and △							
Maximum motor cable length		15 m when MOVIMOT® inverter is mounted close to the motor (with SEW-EURODRIVE hybrid cable)							

22167811/EN – 04/2016

MOVIMOT® type		MM 03D-503-00	MM 05D-503-00	MM 07D-503-00	MM 11D-503-00	MM 15D-503-00	MM 22D-503-00	MM 30D-503-00	MM 40D-503-00
Part number		1821 4991	1821 5009	1821 5017	1821 5025	1821 5033	1821 5041	1821 5068	1821 5076
Size		1					2		2L
External braking resistor	R_{min}	150 Ω					68 Ω		
Interference immunity		Complies with EN 61800-3							
Interference emission		Complies with category C2 according to EN 61800-3 (limit class A to EN 55011 and EN 55014)							
Ambient temperature	ϑ_A	-25 to +40 °C depending on the motor P_N reduction: 3% I_N per K to max. 60 °C							
Climate class		EN 60721-3-3, class 3K3							
Storage temperature[2]		-30 to +85 °C (EN 60721-3-3, class 3K3)							
Maximum permitted vibration and shock load		According to EN 68100-5-1							
Degree of protection (depending on the motor)		IP54, IP55, IP65, IP66 (options, specify when ordering) (Connection box closed and all cable entries sealed, the degree of protection of the MOVIMOT® drive decreases with a lower degree of protection of the motor)							
Operating mode		S1, S3 max. cycle duration 10 minutes (EN 60034-1)							
Type of cooling		Natural cooling (DIN 41751)							
Installation altitude		h ≤ 1,000 m: No reduction h > 1000 m: I_N reduction by 1% per 100 m. h > 2000 m: V_{line} reduction by AC 6 V per 100 m, overvoltage class 2 according to EN 60664-1 h_{max} = 4000 m See also chapter "Installation above 1000 m amsl" (→ 🗎 42).							
Weight		See "MOVIMOT® gearmotors" catalog							
Dimensions, dimension drawings									
Output torque ratings									
Required preventive measures		Grounding the unit							

1) 16 kHz PWM frequency (low-noise): When DIP SWITCH S1/7 is set to ON, the units operate at a PWM frequency of 16 kHz (low noise) and switch back in steps to lower switching frequencies depending on the heat sink temperature and the load.
2) If the unit is stored for a long time, connect it to the line voltage for at least 5 minutes every 2 years. Otherwise, the service life of the unit may be reduced.

22167811/EN – 04/2016

13.3 Motor with operating point 230 V/60 Hz

MOVIMOT® type		MM 03D-233-00	MM 05D-233-00	MM 07D-233-00	MM 11D-233-00	MM 15D-233-00	MM 22D-233-00
Part number		**18215084**	**18215092**	**18215106**	**18215114**	**18215122**	**18215130**
Size		**1**			**2**		
Apparent output power at V_{line} = AC 200 – 240 V	S_N	1.0 kVA	1.3 kVA	1.7 kVA	2.0 kVA	2.9 kVA	3.4 kVA
Connection voltages **Permitted range**	V_{line}	3x AC 200 V/**230 V**/240 V V_{Line} = 3x AC 200 V -10% – AC 240 V +10%					
Line frequency	f_{line}	50 – 60 Hz ± 10%					
Nominal line current at V_{line} = AC 230 V	I_{line}	AC 1.9 A	AC 2.4 A	AC 3.5 A	AC 5.0 A	AC 6.7 A	AC 7.3 A
Output voltage	V_O	0 – V_{line}					
Output frequency **Resolution** **Operating point**	f_A	2 – 120 Hz 0.01 Hz 230 V at 60 Hz					
Nominal output current	I_N	AC 2.5 A	AC 3.2 A	AC 4.0 A	AC 5.5 A	AC 7.3 A	AC 8.7 A
Motor power S1	P_{Mot}	**0.37 kW** 0.5 HP	**0.55 kW** 0.75 HP	**0.75 kW** 1.0 HP	**1.1 kW** 1.5 HP	**1.5 kW** 2.0 HP	**2.2 kW** 3.0 HP
PWM frequency		4 (factory setting)/8/16 kHz [1)]					
Current limiting	I_{max}	Motor mode: 160% for ⅄ and △ Regenerative operation: 160% for ⅄ and △					
Maximum motor cable length		15 m when install near the motor MOVIMOT® frequency inverter (with SEW-EURODRIVE hybrid cable)					

22167811/EN – 04/2016

MOVIMOT® type		MM 03D-233-00	MM 05D-233-00	MM 07D-233-00	MM 11D-233-00	MM 15D-233-00	MM 22D-233-00
Part number		**18215084**	**18215092**	**18215106**	**18215114**	**18215122**	**18215130**
Size		**1**			**2**		
External braking resistor	R_{min}	150 Ω			68 Ω		
Interference immunity		Complies with EN 61800-3					
Interference emission		Complies with category C2 according to EN 61800-3 (limit class A to EN 55011 and EN 55014)					
Ambient temperature	ϑ_A	-25 to +40 °C depending on the motor P_N reduction: 3% I_N per K to max. 60 °C					
Climate class		EN 60721-3-3, class 3K3					
Storage temperature[2)]		-30 to +85 °C (EN 60721-3-3, class 3K3)					
Maximum permitted vibration and shock load		According to EN 61800-5-1					
Degree of protection (depending on the motor)		IP54, IP55, IP65, IP66 (options, specify when ordering) (Connection box closed and all cable entries sealed, the degree of protection of the MOVIMOT® drive decreases with a lower degree of protection of the motor)					
Operating mode		S1, S3 max. cycle duration 10 minutes (EN 60034-1)					
Type of cooling		Natural cooling (DIN 41751)					
Installation altitude		h ≤ 1,000 m: No reduction h > 1000 m: I_N reduction by 1% per 100 m. h > 2000 m: V_{line} reduction by AC 3 V per 100 m, overvoltage class 2 according to EN 60664-1 h_{max} = 4000 m See also chapter "Installation above 1000 m amsl" (→ 🗎 42).					
Weight		See "MOVIMOT® gearmotors" catalog					
Dimensions, dimension drawings							
Output torque ratings							
Required preventive measures		Grounding the unit					

1) 16 kHz PWM frequency (low-noise): When DIP SWITCH S1/7 is set to ON, the units operate at a PWM frequency of 16 kHz (low noise) and switch back in steps to lower switching frequencies depending on the heat sink temperature and the load.
2) If the unit is stored for a long time, connect it to the line voltage for at least 5 minutes every 2 years. Otherwise, the service life of the unit may be reduced.

22167811/EN – 04/2016

13.4 AS-Interface technical data

13.4.1 Technical data of AS-Interface MLK30A, MLK31A

AS-Interface MLK30A, MLK31A			
External electronics supply	Terminal 24V	AS-Interface:	29.5 – 31.6 V
	Terminal ⊥		(AS-Interface power supply to EN 50295)
		AUX PWR (optional):	24 V ± 25% EN 61131-2 residual ripple max. 13% input capacitance: 120 µF
			A PELV power supply (Protective Extra Low Voltage) to IEC 60364-4-41 with safe separation is mandatory for the AUX PWR auxiliary supply.
	I_E only AS-Interface:		≤ 200 mA[1] (typically 120 mA at 30 V)
	I_E AS-Interface + AUX PWR:		≤ 40 mA (typically 25 mA at 30 V)
			+ 200 mA[1] (typically 120 mA at 24 V)
Control input	Terminal AS +	Connection of the AS-interface data line	
	Terminal AS +	Connection of the AS-interface data line	
Sensor connection	Terminal DI2	External sensor input	
	Terminal DI3	External sensor input	
	Terminal V024	24 V for sensor supply	
	Terminal V0⊥	Reference potential for sensor supply	
Sensor inputs	PLC-compatible in accordance with EN 61131-2		
	R_i about 3.0 kΩ		
	I_E about 10 mA		
Signal level	+15 – +30 V		"1"
	-3 – +5 V		"0"
Maximum sensor cable length	15 m		

1) When the MOVIMOT® inverter is supplied via the AS-Interface cable and the AUX PWR cable, the sensors are supplied via the AUX PWR cable. The current increases by the demand of the connected sensors (max 100 mA).

22167811/EN – 04/2016

13.4.2 Technical data of AS-Interface MLK32A

AS-Interface MLK32A			
External electronics supply	Terminal 24V	AS-Interface:	29.5 – 31.6 V
	Terminal ⊥		(AS-Interface power supply to EN 50295)
		AUX PWR (optional):	24 V ± 25% EN 61131-2 residual ripple max. 13% input capacitance: 120 µF
			A PELV power supply (Protective Extra Low Voltage) to IEC 60364-4-41 with safe separation is mandatory for the AUX PWR auxiliary supply.
	I_E AS-Interface:		≤ 50 mA[1] (typically 30 mA at 30 V)
	I_E AUX-PWR:		≤ 200 mA (typically 120 mA at 24 V)
Control input	Terminal AS +	Connection of the AS-interface data line	
	Terminal AS +	Connection of the AS-interface data line	
Sensor connection	Terminal DI2	External sensor input	
	Terminal DI3	External sensor input	
	Terminal V024	24 V for sensor supply	
	Terminal V0⊥	Reference potential for sensor supply	
Sensor inputs	PLC-compatible in accordance with EN 61131-2		
	R_i about 3.0 kΩ		
	I_E about 10 mA		
Signal level	+15 – +30 V		"1"
	-3 – +5 V		"0"
Maximum sensor cable length	15 m		

1) The sensors are supplied via the AS-Interface cable. The current increases by the demand of the connected sensors (max 100 mA).

22167811/EN – 04/2016

13.4.3 AS-interface MLK30A binary slave

AS-Interface MLK30A	
Protocol option	AS-Interface binary slave with "four bit I/O mode slave" S-7.F profile
AS-Interface profile	S-7.F
I/O configuration	7_{hex}
ID-Code	F_{hex}
Ext. ID code 2	E_{hex}
Ext. ID code1	F_{hex}
Address	1 – 31 (factory setting: 0), can be changed as often as required

13.4.4 AS-Interface MLK31A double slave

AS-Interface MLK31A	Slave A	Slave B
Protocol variant	AS-Interface double slave in extended address mode AS-Interface specification V3.0, rev.02 in conjunction with M4 master profile	
AS-Interface profile	S-7.A.7.7	S-7.A.5.F
I/O configuration	7_{hex}	7_{hex}
ID code	A_{hex}	A_{hex}
Ext. ID code 2	7_{hex}	5_{hex}
Ext. ID code 1	7_{hex}	7_{hex}
Function	4DI/4DO cyclical 4PDI/3PDO	serial acyclic
Address	1 – 31 (factory setting: 0), can be changed as often as required	

13.4.5 AS-Interface MLK32A binary slave

AS-Interface MLK32A	
Protocol variant	AS-Interface binary slave in extended address mode AS-Interface specification V3.0, rev.02 in conjunction with M4 master profile
AS-Interface profile	S-7.A.7.7
I/O configuration	7_{hex}
ID code	A_{hex}
Ext. ID code 2	7_{hex}
Ext. ID code 1	7_{hex}
Address	1A – 31A and 1B – 31B, can be changed as often as required

22167811/EN – 04/2016

13.5 Technical data of options and accessories

13.5.1 MLU13A

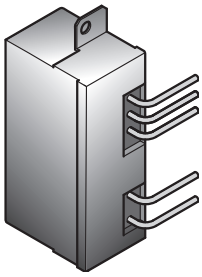

Option	MLU13A
Part number	18205968
Function	24 V voltage supply
Input voltage	AC 380 – 500 V ± 10% (50/60 Hz)
Output voltage	DC 24 V ± 25%
Output power	max. 8 W
Degree of protection	IP20
Ambient temperature	-25 – +85°C
Storage temperature	-25 – +85°C

13.5.2 MNF21A

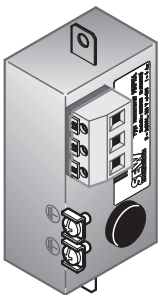

Option	MNF21A (only for MM03D-503-00 – MM15D-503-00)
Part number	08042659
Function	3-phase line filter (allows for category C1 to EN 61800-3)
Input voltage	3x AC 380 V ±10% / 50 – 60 Hz
Input current	4 A
Degree of protection	IP20
Ambient temperature	-25 – +60 °C
Storage temperature	-25 – +85 °C

13.5.3 URM

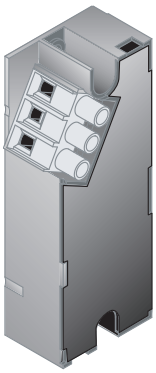

Option	URM
Part number	08276013
Function	Voltage relay, ensures quick application of the mechanical brake
Rated voltage V_N	DC 36 – 167 V (Brake coil AC 88 – 400 V)
Braking current I_N	0.75 A
Degree of protection	IP20
Ambient temperature	-25 – +60°C
Storage temperature	-25 – +85°C
Disconnection time t_{off}	Approx. 40 ms (without URM option: 100 ms) (cut-off in the DC circuit)

22167811/EN – 04/2016

13.5.4 BEM

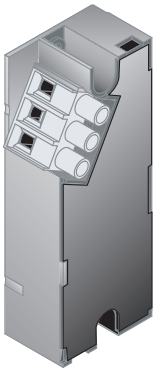

NOTICE

If the connection voltage is too high, the BEM brake rectifier or the brake coil connected to it can be damaged.

Damage to the BEM brake rectifier or the brake coil.

- Select a brake with rated brake voltage that matches the nominal line voltage.

Option	BEM
Part number	08296111
Function	Brake rectifier ensures the rapid switching (release and application) of the mechanical brake.
Rated supply voltage	AC 230 V – AC 500 V + 10%/- 15% 50 – 60 Hz ± 5% Black connection wires
Control voltage	DC 0 – 5 V
	MOVIMOT® connection: PCB connector X10
Braking current	max. DC 0.8 A
	Brake connection 13, 14, 15
Degree of protection	IP20
Ambient temperature	-25 – +60 °C
Storage temperature	-25 – +85 °C
Disconnection time t_{off}	10 – 20 ms

13.5.5 DBG

Option	DBG60B-01	DBG60B-02	DBG60B-03	DBG60B-04
Part number	18204031	18204058	18204066	18208509
Function	Keypad			
Connection	RJ10 connector For connection to the X50 diagnostic interface			
Degree of protection	IP40 (EN 60529)			
Ambient temperature	0 – +40 °C			
Storage temperature	-20 – +80 °C			

22167811/EN – 04/2016

13.5.6 Forced cooling fan V

Option	V forced cooling fan				
for motor size DR..	71	80	90	100	112/132
Input voltage	DC 24 V				
Current consumption	0.35 A	0.5 A	0.75 A	0.75/ 1.1 A	1.64 A
Power demand	10 W	12 W	14 W	14/19 W	29 W
Air discharge rate	60 m^3/h		170 m^3/h	210 m^3/h	295 m^3/h
Connection	Terminal strip				
Max. cable cross section	3 x 1.5 mm^2				
Cable gland	M16 x 1.5				
Degree of protection	IP66				
Ambient temperature	–20 – +60°C				

13.6 Diagnostic interface

Diagnostic interface X50	
Standard	RS485 to EIA standard (with integrated dynamic terminating resistor)
Baud rate	9.6 kbaud
Start bits	1 start bit
Stop bits	1 stop bit
Data bits	8 data bits
Parity	1 parity bit, completing for even parity (even parity)
Data direction	Bidirectional
Operating mode	Aynchronous, semi-duplex
Connection	RJ10 socket

22167811/EN – 04/2016

13.7 Work done, working air gap, braking torque of brake

Brake type	Work done until maintenance	Working air gap [mm]		Brake disk [mm]	Braking torque settings				
					Braking torque	Type and number of brake springs		Order numbers for brake springs	
	[10^6 J]	min.[1]	max.	min.	[Nm]	Normal	Blue	Normal	Blue
BE05	120	0.25	0.6	9.0	5.0	2	4	0135017X	13741373
					3.5	2	2		
					2.5	-	6		
					1.8	-	3		
BE1	120	0.25	0.6	9.0	10	6	-	0135017X	13741373
					7.0	4	2		
					5.0	2	4		
BE2	165	0.25	0.6	9.0	20	6	-	13740245	13740520
					14	2	4		
					10	2	2		
					7.0	-	4		
BE5	260	0.25	0.9	9.0	55	6	-	13740709	13740717
					40	2	4		
					28	2	2		
					20	-	4		
BE11	640	0.3	1.2	10.0	110	6	-	13741837	13741847
					80	2	4		
					55	2	2		
					40	-	4		

1) When checking the working air gap, note: Parallelism tolerances on the brake disk may give rise to deviations of ± 0.15 mm after a test run.

22167811/EN – 04/2016

13.8 Braking torque assignment

Motor type	Brake type	Braking torque steps [Nm]												
DR.71	BE05	1.8	2.5	3.5	5.0									
	BE1				5.0	7.0	10							
DR.80	BE05	1.8	2.5	3.5	5.0									
	BE1				5.0	7.0	10							
	BE2					7.0	10	14	20					
DR.90	BE1				5.0	7.0	10							
	BE2					7.0	10	14	20					
	BE5								20	28	40	55		
DR.100	BE2					7.0	10	14	20					
	BE5								20	28	40	55		
DR.112	BE5									28	40	55		
	BE11										40	55		
DR.132	BE5									28	40	55		
	BE11										40	55	80	110

Preferred brake voltage

MOVIMOT® type		Preferred brake voltage
MOVIMOT® MM..D-503, size 1	(MM03.. to MM15..).	230 V
MOVIMOT® MM..D-503, size 2	(MM22.. to MM40..)	120 V
MOVIMOT® MM..D-223[1], size 1 and 2	(MM03.. to MM40..)	

1) In connection with MOVIMOT MM..D-233, only the brakes with a nominal voltage of 120 V are permitted.

13.9 Assignment of internal braking resistors

MOVIMOT® type	Braking resistor	Part number
MM03D-503-00 – MM15D-503-00 MM03D-233-00 – MM07D-233-00	BW1	08228973[1]
MM22D-503-00 – MM40D-503-00 MM11D-233-00 – MM22D-233-00	BW2	08231362[1]

1) 2 screws M4 x 8, included in scope of delivery.

22167811/EN – 04/2016

13.10 Assignment of external braking resistors

MOVIMOT® type	Braking resistor	Part no.	Protective grid
MM03D-503-00 – MM15D-503-00 MM03D-233-00 – MM07D-233-00	BW200-003/K-1.5	08282919	0813152X
	BW200-005/K-1.5	08282838	–
	BW150-006/T	17969565	–
MM22D-503-00 – MM40D-503-00 MM11D-233-00 – MM22D-233-00	BW100-003/K-1.5	08282935	0813152X
	BW100-005/K-1.5	08282862	–
	BW068-006/T	17970008	–
	BW068-012/T	17970016	–

13.10.1 BW100.. BW200..

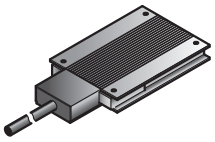

	BW100-003/ K-1.5	BW100-005/ K-1.5	BW200-003/ K-1.5	BW200-005/ K-1.5
Part number	08282935	08282862	08282919	08282838
Function	Dissipating the regenerative energy			
Degree of protection	IP65			
Resistance	100 Ω	100 Ω	200 Ω	200 Ω
Power in S1, 100% cdf	100 W	200 W	100 W	200 W
Dimensions W x H x D	146 x 15 x 80 mm	252 x 15 x 80 mm	146 x 15 x 80 mm	252 x 15 x 80 mm
Line length	1.5 m			

22167811/EN – 04/2016

13.10.2 BW150.. BW068..

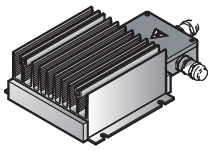

	BW150-006-T	BW68-006-T	BW68-012-T
Part number	17969565	17970008	17970016
Function	Dissipating the regenerative energy		
Degree of protection	IP66		
Resistance	150 Ω	68 Ω	68 Ω
Power according to UL in S1, 100% cdf	600 W	600 W	1200 W
Power according to CE in S1, 100% cdf	900 W	900 W	1800 W
Dimensions W x H x D	285 x 75 x 174 mm	285 x 75 x 174 mm	635 x 75 x 174 mm
Maximum permitted cable length	15 m		

INFORMATION

Generally speaking, the application does not need the temperature sensor of the braking resistor. The higher-level controller can evaluate the temperature sensor's signal and switch off the supply voltage of the drive when necessary.

13.11 Resistance and assignment of the brake coil

Brake	Resistance of the brake coil[1]		
	120 V	230 V	400 V
BE03	76 Ω	378 Ω	1197 Ω
BE05	78 Ω	312 Ω	985 Ω
BE1	78 Ω	312 Ω	985 Ω
BE2	58 Ω	232 Ω	732 Ω
BE5	51 Ω	200 Ω	640 Ω
BE11	33 Ω	130 Ω	412 Ω

1) Nominal value measured between the red connection (terminal 13) and the blue connection (terminal 15) at 20°C, temperature-dependent fluctuations in the range –25% / +40% are possible.

22167811/EN – 04/2016

13.12 Assignment of the drive ID module

Motor			Drive ID module		
Type	Line voltage [V]	Line frequency [Hz]	Identification	ID color	Part number
DRS	230/400	50	DRS/400/50	White	18214371
DRE	230/400	50	DRE/400/50	Orange	18214398
DRS	266/460	60	DRS/460/60[1)]	Yellow	18214401
DRE	266/460	60	DRE/460/60[1)]	Green	18214428
DRS/DRE	220/380	60	DRS/DRE/380/60[1)]	Red	18234933
DRS/DRE	220 – 240/380 – 415 254 – 277/440 – 480	50 60	DRS/DRE/50/60	Purple	18214444
DRP	230/400	50	DRP/230/400	Brown	18217907
DRP	266/460	60	DRP/266/460[1)]	Beige	18217915
DRU...J	230/400	50	DRU...J/400/50	Gray	28203194
DRN	230/400	50	DRN/400/50	Light blue	28222040
DRN	266/460	60	DRN/460/60	Blue green	28222059
DRS/DRN	220 – 230/380 – 400 266/460	50 60	DRS/DRN/50/60	Pastel green	28222067

1) This drive ID module can also be combined with MOVIMOT® MM..D-233.

22167811/EN – 04/2016

14 Declaration of conformity

EU Declaration of Conformity

Translation of the original text **900030310/EN**

SEW-EURODRIVE GmbH & Co. KG
Ernst-Blickle-Straße 42, D-76646 Bruchsal
declares under sole responsibility that the following products

Frequency inverters of the product series	**MOVIMOT® MM..D-..3-..** **MOVIMOT® .../MM../...**

are in conformity with

Machinery Directive	**2006/42/EC** **(L 157, 09.06.2006, 24-86)**	

This includes the fulfillment of the protection targets for "electrical power supply" in accordance with annex I No. 1.5.1 according to the Low Voltage Directive 73/23/EEC -- Note: 2006/95/EC (until 19 Apr 2016) and 2014/35/EU (as of 20 Apr 2016) are currently valid.

EMC Directive	**2004/108/EC (valid until April 19, 2016)** **2014/30/EU (valid as of April 20, 2016)** **(L 96, 29.03.2014, 79-106)**	**4)** **4)**
Applied harmonized standards:	**EN ISO 13849-1:2008/AC:2009** **EN 61800-5-2:2007** **EN 61800-5-1:2007** **EN 61800-3:2004/A1:2012**	

4) According to the EMC Directive, the listed products are not independently operable products. EMC assessment is only possible after these products have been integrated in an overall system. For the assessment, the product was installed in a typical plant configuration.

Bruchsal	**19.04.2016**		
Place	Date	Johann Soder Managing Director Technology	a) b)

a) Authorized representative for issuing this declaration on behalf of the manufacturer
b) Authorized representative for compiling the technical documents

22167811/EN – 04/2016

15 Address list

Algeria			
Sales	Algiers	REDUCOM Sarl 16, rue des Frères Zaghnoune Bellevue 16200 El Harrach Alger	Tel. +213 21 8214-91 Fax +213 21 8222-84 http://www.reducom-dz.com info@reducom-dz.com
Argentina			
Assembly Sales	Buenos Aires	SEW EURODRIVE ARGENTINA S.A. Ruta Panamericana Km 37.5, Lote 35 (B1619IEA) Centro Industrial Garín Prov. de Buenos Aires	Tel. +54 3327 4572-84 Fax +54 3327 4572-21 http://www.sew-eurodrive.com.ar sewar@sew-eurodrive.com.ar
Australia			
Assembly Sales Service	Melbourne	SEW-EURODRIVE PTY. LTD. 27 Beverage Drive Tullamarine, Victoria 3043	Tel. +61 3 9933-1000 Fax +61 3 9933-1003 http://www.sew-eurodrive.com.au enquires@sew-eurodrive.com.au
	Sydney	SEW-EURODRIVE PTY. LTD. 9, Sleigh Place, Wetherill Park New South Wales, 2164	Tel. +61 2 9725-9900 Fax +61 2 9725-9905 enquires@sew-eurodrive.com.au
Austria			
Assembly Sales Service	Vienna	SEW-EURODRIVE Ges.m.b.H. Richard-Strauss-Straße 24 1230 Wien	Tel. +43 1 617 55 00-0 Fax +43 1 617 55 00-30 http://www.sew-eurodrive.at sew@sew-eurodrive.at
Bangladesh			
Sales	Bangladesh	SEW-EURODRIVE INDIA PRIVATE LIMITED 345 DIT Road East Rampura Dhaka-1219, Bangladesh	Tel. +88 01729 097309 salesdhaka@seweurodrivebangladesh.com
Belarus			
Sales	Minsk	Foreign unitary production enterprise SEW-EURODRIVE RybalkoStr. 26 220033 Minsk	Tel. +375 17 298 47 56 / 298 47 58 Fax +375 17 298 47 54 http://www.sew.by sales@sew.by
Belgium			
Assembly Sales Service	Brussels	SEW-EURODRIVE n.v./s.a. Researchpark Haasrode 1060 Evenementenlaan 7 3001 Leuven	Tel. +32 16 386-311 Fax +32 16 386-336 http://www.sew-eurodrive.be info@sew-eurodrive.be
Service Competence Center	Industrial Gears	SEW-EURODRIVE n.v./s.a. Rue de Parc Industriel, 31 6900 Marche-en-Famenne	Tel. +32 84 219-878 Fax +32 84 219-879 http://www.sew-eurodrive.be service-IG@sew-eurodrive.be
Brazil			
Production Sales Service	São Paulo	SEW-EURODRIVE Brasil Ltda. Estrada Municipal José Rubim, 205 – Rodovia Santos Dumont Km 49 Indaiatuba – 13347-510 – SP	Tel. +55 19 3835-8000 sew@sew.com.br
Assembly Sales Service	Rio Claro	SEW-EURODRIVE Brasil Ltda. Rodovia Washington Luiz, Km 172 Condomínio Industrial Conpark Caixa Postal: 327 13501-600 – Rio Claro / SP	Tel. +55 19 3522-3100 Fax +55 19 3524-6653 montadora.rc@sew.com.br
	Joinville	SEW-EURODRIVE Brasil Ltda. Rua Dona Francisca, 12.346 – Pirabeiraba 89239-270 – Joinville / SC	Tel. +55 47 3027-6886 Fax +55 47 3027-6888 filial.sc@sew.com.br
Bulgaria			
Sales	Sofia	BEVER-DRIVE GmbH Bogdanovetz Str.1 1606 Sofia	Tel. +359 2 9151160 Fax +359 2 9151166 bever@bever.bg

22167811/EN – 04/2016

Cameroon			
Sales	Douala	SEW-EURODRIVE S.A.R.L. Ancienne Route Bonabéri P.O. Box B.P 8674 Douala-Cameroun	Tel. +237 233 39 02 10 Fax +237 233 39 02 10 info@sew-eurodrive-cm
Canada			
Assembly Sales Service	Toronto	SEW-EURODRIVE CO. OF CANADA LTD. 210 Walker Drive Bramalea, ON L6T 3W1	Tel. +1 905 791-1553 Fax +1 905 791-2999 http://www.sew-eurodrive.ca l.watson@sew-eurodrive.ca
	Vancouver	SEW-EURODRIVE CO. OF CANADA LTD. Tilbury Industrial Park 7188 Honeyman Street Delta, BC V4G 1G1	Tel. +1 604 946-5535 Fax +1 604 946-2513 b.wake@sew-eurodrive.ca
	Montreal	SEW-EURODRIVE CO. OF CANADA LTD. 2555 Rue Leger Lasalle, PQ H8N 2V9	Tel. +1 514 367-1124 Fax +1 514 367-3677 a.peluso@sew-eurodrive.ca
Chile			
Assembly Sales Service	Santiago de Chile	SEW-EURODRIVE CHILE LTDA Las Encinas 1295 Parque Industrial Valle Grande LAMPA Santiago de Chile P.O. Box Casilla 23 Correo Quilicura - Santiago - Chile	Tel. +56 2 2757 7000 Fax +56 2 2757 7001 http://www.sew-eurodrive.cl ventas@sew-eurodrive.cl
China			
Production Assembly Sales Service	Tianjin	SEW-EURODRIVE (Tianjin) Co., Ltd. No. 78, 13th Avenue, TEDA Tianjin 300457	Tel. +86 22 25322612 Fax +86 22 25323273 http://www.sew-eurodrive.cn info@sew-eurodrive.cn
Assembly Sales Service	Suzhou	SEW-EURODRIVE (Suzhou) Co., Ltd. 333, Suhong Middle Road Suzhou Industrial Park Jiangsu Province, 215021	Tel. +86 512 62581781 Fax +86 512 62581783 suzhou@sew-eurodrive.cn
	Guangzhou	SEW-EURODRIVE (Guangzhou) Co., Ltd. No. 9, JunDa Road East Section of GETDD Guangzhou 510530	Tel. +86 20 82267890 Fax +86 20 82267922 guangzhou@sew-eurodrive.cn
	Shenyang	SEW-EURODRIVE (Shenyang) Co., Ltd. 10A-2, 6th Road Shenyang Economic Technological Develop-ment Area Shenyang, 110141	Tel. +86 24 25382538 Fax +86 24 25382580 shenyang@sew-eurodrive.cn
	Taiyuan	SEW-EURODRIVE (Taiyuan) Co,. Ltd. No.3, HuaZhang Street, TaiYuan Economic & Technical Development Zone ShanXi, 030032	Tel. +86-351-7117520 Fax +86-351-7117522 taiyuan@sew-eurodrive.cn
	Wuhan	SEW-EURODRIVE (Wuhan) Co., Ltd. 10A-2, 6th Road No. 59, the 4th Quanli Road, WEDA 430056 Wuhan	Tel. +86 27 84478388 Fax +86 27 84478389 wuhan@sew-eurodrive.cn
	Xi'An	SEW-EURODRIVE (Xi'An) Co., Ltd. No. 12 Jinye 2nd Road Xi'An High-Technology Industrial Development Zone Xi'An 710065	Tel. +86 29 68686262 Fax +86 29 68686311 xian@sew-eurodrive.cn
Sales Service	Hong Kong	SEW-EURODRIVE LTD. Unit No. 801-806, 8th Floor Hong Leong Industrial Complex No. 4, Wang Kwong Road Kowloon, Hong Kong	Tel. +852 36902200 Fax +852 36902211 contact@sew-eurodrive.hk

22167811/EN – 04/2016

Colombia			
Assembly Sales Service	Bogota	SEW-EURODRIVE COLOMBIA LTDA. Calle 17 No. 132-18 Interior 2 Bodega 6, Manzana B Santafé de Bogotá	Tel. +57 1 54750-50 Fax +57 1 54750-44 http://www.sew-eurodrive.com.co sew@sew-eurodrive.com.co
Croatia			
Sales Service	Zagreb	KOMPEKS d. o. o. Zeleni dol 10 10 000 Zagreb	Tel. +385 1 4613-158 Fax +385 1 4613-158 kompeks@inet.hr
Czech Republic			
Assembly Sales Service	Hostivice	SEW-EURODRIVE CZ s.r.o. Floriánova 2459 253 01 Hostivice	Tel. +420 255 709 601 Fax +420 235 350 613 http://www.sew-eurodrive.cz sew@sew-eurodrive.cz
	Drive Service Hotline / 24 Hour Service	+420 800 739 739 (800 SEW SEW)	Service Tel. +420 255 709 632 Fax +420 235 358 218 servis@sew-eurodrive.cz
Denmark			
Assembly Sales Service	Copenhagen	SEW-EURODRIVEA/S Geminivej 28-30 2670 Greve	Tel. +45 43 95 8500 Fax +45 43 9585-09 http://www.sew-eurodrive.dk sew@sew-eurodrive.dk
Egypt			
Sales Service	Cairo	Copam Egypt for Engineering & Agencies Building 10, Block 13005, First Industrial Zone, Obour City Cairo	Tel. +202 44812673 / 79 (7 lines) Fax +202 44812685 http://www.copam-egypt.com copam@copam-egypt.com
Estonia			
Sales	Tallin	ALAS-KUUL AS Reti tee 4 75301 Peetri küla, Rae vald, Harjumaa	Tel. +372 6593230 Fax +372 6593231 http://www.alas-kuul.ee veiko.soots@alas-kuul.ee
Finland			
Assembly Sales Service	Hollola	SEW-EURODRIVE OY Vesimäentie 4 15860 Hollola	Tel. +358 201 589-300 Fax +358 3 780-6211 http://www.sew-eurodrive.fi sew@sew.fi
Service	Hollola	SEW-EURODRIVE OY Keskikankaantie 21 15860 Hollola	Tel. +358 201 589-300 Fax +358 3 780-6211 http://www.sew-eurodrive.fi sew@sew.fi
Production Assembly	Karkkila	SEW Industrial Gears Oy Santasalonkatu 6, PL 8 03620 Karkkila, 03601 Karkkila	Tel. +358 201 589-300 Fax +358 201 589-310 http://www.sew-eurodrive.fi sew@sew.fi
France			
Production Sales Service	Hagenau	SEW-USOCOME 48-54 route de Soufflenheim B. P. 20185 67506 Haguenau Cedex	Tel. +33 3 88 73 67 00 Fax +33 3 88 73 66 00 http://www.usocome.com sew@usocome.com
Production	Forbach	SEW-USOCOME Zone industrielle Technopôle Forbach Sud B. P. 30269 57604 Forbach Cedex	Tel. +33 3 87 29 38 00
	Brumath	SEW-USOCOME 1 Rue de Bruxelles 67670 Mommenheim Cedex	Tel. +33 3 88 37 48 00
Assembly Sales Service	Bordeaux	SEW-USOCOME Parc d'activités de Magellan 62 avenue de Magellan – B. P. 182 33607 Pessac Cedex	Tel. +33 5 57 26 39 00 Fax +33 5 57 26 39 09

22167811/EN – 04/2016

France			
	Lyon	SEW-USOCOME 75 rue Antoine Condorcet 38090 Vaulx-Milieu	Tel. +33 4 74 99 60 00 Fax +33 4 74 99 60 15
	Nantes	SEW-USOCOME Parc d'activités de la forêt 4 rue des Fontenelles 44140 Le Bignon	Tel. +33 2 40 78 42 00 Fax +33 2 40 78 42 20
	Paris	SEW-USOCOME Zone industrielle 2 rue Denis Papin 77390 Verneuil l'Étang	Tel. +33 1 64 42 40 80 Fax +33 1 64 42 40 88
Gabon			
Sales	Libreville	SEW-EURODRIVE SARL 183, Rue 5.033.C, Lalala à droite P.O. Box 15682 Libreville	Tel. +241 03 28 81 55 +241 06 54 81 33 http://www.sew-eurodrive.cm sew@sew-eurodrive.cm
Germany			
Headquarters Production Sales	Bruchsal	SEW-EURODRIVE GmbH & Co KG Ernst-Blickle-Straße 42 76646 Bruchsal P.O. Box Postfach 3023 – D-76642 Bruchsal	Tel. +49 7251 75-0 Fax +49 7251 75-1970 http://www.sew-eurodrive.de sew@sew-eurodrive.de
Production / Industrial Gears	Bruchsal	SEW-EURODRIVE GmbH & Co KG Christian-Pähr-Str. 10 76646 Bruchsal	Tel. +49 7251 75-0 Fax +49 7251 75-2970
Production	Graben	SEW-EURODRIVE GmbH & Co KG Ernst-Blickle-Straße 1 76676 Graben-Neudorf P.O. Box Postfach 1220 – D-76671 Graben-Neudorf	Tel. +49 7251 75-0 Fax +49 7251-2970
	Östringen	SEW-EURODRIVE GmbH & Co KG, Werk Östringen Franz-Gurk-Straße 2 76684 Östringen	Tel. +49 7253 9254-0 Fax +49 7253 9254-90 oestringen@sew-eurodrive.de
Service Competence Center	Mechanics / Mechatronics	SEW-EURODRIVE GmbH & Co KG Ernst-Blickle-Straße 1 76676 Graben-Neudorf	Tel. +49 7251 75-1710 Fax +49 7251 75-1711 scc-mechanik@sew-eurodrive.de
	Electronics	SEW-EURODRIVE GmbH & Co KG Ernst-Blickle-Straße 42 76646 Bruchsal	Tel. +49 7251 75-1780 Fax +49 7251 75-1769 scc-elektronik@sew-eurodrive.de
Drive Technology Center	North	SEW-EURODRIVE GmbH & Co KG Alte Ricklinger Straße 40-42 30823 Garbsen (Hannover)	Tel. +49 5137 8798-30 Fax +49 5137 8798-55 dtc-nord@sew-eurodrive.de
	East	SEW-EURODRIVE GmbH & Co KG Dänkritzer Weg 1 08393 Meerane (Zwickau)	Tel. +49 3764 7606-0 Fax +49 3764 7606-30 dtc-ost@sew-eurodrive.de
	South	SEW-EURODRIVE GmbH & Co KG Domagkstraße 5 85551 Kirchheim (München)	Tel. +49 89 909552-10 Fax +49 89 909552-50 dtc-sued@sew-eurodrive.de
	West	SEW-EURODRIVE GmbH & Co KG Siemensstraße 1 40764 Langenfeld (Düsseldorf)	Tel. +49 2173 8507-30 Fax +49 2173 8507-55 dtc-west@sew-eurodrive.de
Drive Center	Berlin	SEW-EURODRIVE GmbH & Co KG Alexander-Meißner-Straße 44 12526 Berlin	Tel. +49 306331131-30 Fax +49 306331131-36 dc-berlin@sew-eurodrive.de
	Ludwigshafen	SEW-EURODRIVE GmbH & Co KG c/o BASF SE Gebäude W130 Raum 101 67056 Ludwigshafen	Tel. +49 7251 75 3759 Fax +49 7251 75 503759 dc-ludwigshafen@sew-eurodrive.de
	Saarland	SEW-EURODRIVE GmbH & Co KG Gottlieb-Daimler-Straße 4 66773 Schwalbach Saar – Hülzweiler	Tel. +49 6831 48946 10 Fax +49 6831 48946 13 dc-saarland@sew-eurodrive.de
	Ulm	SEW-EURODRIVE GmbH & Co KG Dieselstraße 18 89160 Dornstadt	Tel. +49 7348 9885-0 Fax +49 7348 9885-90 dc-ulm@sew-eurodrive.de

22167811/EN – 04/2016

Germany			
	Würzburg	SEW-EURODRIVE GmbH & Co KG Nürnbergerstraße 118 97076 Würzburg-Lengfeld	Tel. +49 931 27886-60 Fax +49 931 27886-66 dc-wuerzburg@sew-eurodrive.de
Drive Service Hotline / 24 Hour Service			0 800 SEWHELP 0 800 7394357
Great Britain			
Assembly Sales Service	Normanton	SEW-EURODRIVE Ltd. DeVilliers Way Trident Park Normanton West Yorkshire WF6 1GX	Tel. +44 1924 893-855 Fax +44 1924 893-702 http://www.sew-eurodrive.co.uk info@sew-eurodrive.co.uk
	Drive Service Hotline / 24 Hour Service		Tel. 01924 896911
Greece			
Sales	Athens	Christ. Boznos & Son S.A. 12, K. Mavromichali Street P.O. Box 80136 18545 Piraeus	Tel. +30 2 1042 251-34 Fax +30 2 1042 251-59 http://www.boznos.gr info@boznos.gr
Hungary			
Sales Service	Budapest	SEW-EURODRIVE Kft. Csillaghegyí út 13. 1037 Budapest	Tel. +36 1 437 06-58 Fax +36 1 437 06-50 http://www.sew-eurodrive.hu office@sew-eurodrive.hu
Iceland			
Sales	Reykjavik	Varma & Vélaverk ehf. Knarrarvogi 4 104 Reykjavík	Tel. +354 585 1070 Fax +354 585)1071 http://www.varmaverk.is vov@vov.is
India			
Registered Office Assembly Sales Service	Vadodara	SEW-EURODRIVE India Private Limited Plot No. 4, GIDC POR Ramangamdi • Vadodara - 391 243 Gujarat	Tel. +91 265 3045200 Fax +91 265 3045300 http://www.seweurodriveindia.com salesvadodara@seweurodriveindia.com
Assembly Sales Service	Chennai	SEW-EURODRIVE India Private Limited Plot No. K3/1, Sipcot Industrial Park Phase II Mambakkam Village Sriperumbudur - 602105 Kancheepuram Dist, Tamil Nadu	Tel. +91 44 37188888 Fax +91 44 37188811 saleschennai@seweurodriveindia.com
	Pune	SEW-EURODRIVE India Private Limited Plant: Plot No. D236/1, Chakan Industrial Area Phase- II, Warale, Tal- Khed, Pune-410501, Maharashtra	Tel. +91 21 35 628700 Fax +91 21 35 628715 salespune@seweurodriveindia.com
Indonesia			
Sales	Medan	PT. Serumpun Indah Lestari Jl.Pulau Solor no. 8, Kawasan Industri Medan II Medan 20252	Tel. +62 61 687 1221 Fax +62 61 6871429 / +62 61 6871458 / +62 61 30008041 sil@serumpunindah.com serumpunindah@yahoo.com http://www.serumpunindah.com
	Jakarta	PT. Cahaya Sukses Abadi Komplek Rukan Puri Mutiara Blok A no 99, Sunter Jakarta 14350	Tel. +62 21 65310599 Fax +62 21 65310600 csajkt@cbn.net.id
	Jakarta	PT. Agrindo Putra Lestari JL.Pantai Indah Selatan, Komplek Sentra Industri Terpadu, Pantai indah Kapuk Tahap III, Blok E No. 27 Jakarta 14470	Tel. +62 21 2921-8899 Fax +62 21 2921-8988 aplindo@indosat.net.id http://www.aplindo.com

22167811/EN – 04/2016

Indonesia			
	Surabaya	PT. TRIAGRI JAYA ABADI Jl. Sukosemolo No. 63, Galaxi Bumi Permai G6 No. 11 Surabaya 60111	Tel. +62 31 5990128 Fax +62 31 5962666 sales@triagri.co.id http://www.triagri.co.id
	Surabaya	CV. Multi Mas Jl. Raden Saleh 43A Kav. 18 Surabaya 60174	Tel. +62 31 5458589 Fax +62 31 5317220 sianhwa@sby.centrin.net.id http://www.cvmultimas.com
Ireland			
Sales Service	Dublin	Alperton Engineering Ltd. 48 Moyle Road Dublin Industrial Estate Glasnevin, Dublin 11	Tel. +353 1 830-6277 Fax +353 1 830-6458 http://www.alperton.ie info@alperton.ie
Israel			
Sales	Tel Aviv	Liraz Handasa Ltd. Ahofer Str 34B / 228 58858 Holon	Tel. +972 3 5599511 Fax +972 3 5599512 http://www.liraz-handasa.co.il office@liraz-handasa.co.il
Italy			
Assembly Sales Service	Milan	SEW-EURODRIVE di R. Blickle & Co.s.a.s. Via Bernini,14 20020 Solaro (Milano)	Tel. +39 02 96 980229 Fax +39 02 96 980 999 http://www.sew-eurodrive.it milano@sew-eurodrive.it
Ivory Coast			
Sales	Abidjan	SEW-EURODRIVE SARL Ivory Coast Rue des Pêcheurs, Zone 3 26 BP 916 Abidjan 26	Tel. +225 21 21 81 05 Fax +225 21 25 30 47 info@sew-eurodrive.ci http://www.sew-eurodrive.ci
Japan			
Assembly Sales Service	Iwata	SEW-EURODRIVE JAPAN CO., LTD 250-1, Shimoman-no, Iwata Shizuoka 438-0818	Tel. +81 538 373811 Fax +81 538 373814 http://www.sew-eurodrive.co.jp sewjapan@sew-eurodrive.co.jp hamamatsu@sew-eurodrive.co.jp
Kazakhstan			
Sales	Almaty	SEW-EURODRIVE LLP 291-291A, Tole bi street 050031, Almaty	Tel. +7 (727) 350 5156 Fax +7 (727) 350 5156 http://www.sew-eurodrive.kz sew@sew-eurodrive.kz
	Tashkent	SEW-EURODRIVE LLP Representative office in Uzbekistan 96A, Sharaf Rashidov street, Tashkent, 100084	Tel. +998 71 2359411 Fax +998 71 2359412 http://www.sew-eurodrive.uz sew@sew-eurodrive.uz
	Ulaanbaatar	IM Trading LLC Narny zam street 62 Sukhbaatar district, Ulaanbaatar 14230	Tel. +976-77109997 Fax +976-77109997 imt@imt.mn
Kenya			
Sales	Nairobi	SEW-EURODRIVE Pty Ltd Transnational Plaza, 5th Floor Mama Ngina Street P.O. Box 8998-00100 Nairobi	Tel. +254 791 398840 http://www.sew-eurodrive.co.tz info@sew.co.tz
Latvia			
Sales	Riga	SIA Alas-Kuul Katlakalna 11C 1073 Riga	Tel. +371 6 7139253 Fax +371 6 7139386 http://www.alas-kuul.lv info@alas-kuul.com

22167811/EN – 04/2016

Lebanon			
Sales (Lebanon)	Beirut	Gabriel Acar & Fils sarl B. P. 80484 Bourj Hammoud, Beirut	Tel. +961 1 510 532 Fax +961 1 494 971 ssacar@inco.com.lb
Sales (Jordan, Kuwait , Saudi Arabia, Syria)	Beirut	Middle East Drives S.A.L. (offshore) Sin El Fil. B. P. 55-378 Beirut	Tel. +961 1 494 786 Fax +961 1 494 971 http://www.medrives.com info@medrives.com
Lithuania			
Sales	Alytus	UAB Irseva Statybininku 106C 63431 Alytus	Tel. +370 315 79204 Fax +370 315 56175 http://www.irseva.lt irmantas@irseva.lt
Luxembourg			
representation: Belgium			
Macedonia			
Sales	Skopje	Boznos DOOEL Dime Anicin 2A/7A 1000 Skopje	Tel. +389 23256553 Fax +389 23256554 http://www.boznos.mk
Malaysia			
Assembly Sales Service	Johor	SEW-EURODRIVE SDN BHD No. 95, Jalan Seroja 39, Taman Johor Jaya 81000 Johor Bahru, Johor West Malaysia	Tel. +60 7 3549409 Fax +60 7 3541404 sales@sew-eurodrive.com.my
Mexiko			
Assembly Sales Service	Quéretaro	SEW-EURODRIVE MEXICO S.A. de C.V. SEM-981118-M93 Tequisquiapan No. 102 Parque Industrial Quéretaro C.P. 76220 Querétaro, México	Tel. +52 442 1030-300 Fax +52 442 1030-301 http://www.sew-eurodrive.com.mx scmexico@seweurodrive.com.mx
Sales Service	Puebla	SEW-EURODRIVE MEXICO S.A. de C.V. Calzada Zavaleta No. 3922 Piso 2 Local 6 Col. Santa Cruz Buenavista C.P. 72154 Puebla, México	Tel. +52 (222) 221 248 http://www.sew-eurodrive.com.mx scmexico@seweurodrive.com.mx
Mongolia			
Technical Office	Ulaanbaatar	IM Trading LLC Narny zam street 62 Union building, Suite A-403-1 Sukhbaatar district, Ulaanbaatar 14230	Tel. +976-77109997 Tel. +976-99070395 Fax +976-77109997 http://imt.mn/ imt@imt.mn
Morocco			
Sales Service	Bouskoura	SEW-EURODRIVE Morocco Parc Industriel CFCIM, Lot 55 and 59 Bouskoura	Tel. +212 522 88 85 00 Fax +212 522 88 84 50 http://www.sew-eurodrive.ma sew@sew-eurodrive.ma
Namibia			
Sales	Swakopmund	DB Mining & Industrial Services Einstein Street Strauss Industrial Park Unit1 Swakopmund	Tel. +264 64 462 738 Fax +264 64 462 734 anton@dbminingnam.com
Netherlands			
Assembly Sales Service	Rotterdam	SEW-EURODRIVE B.V. Industrieweg 175 3044 AS Rotterdam Postbus 10085 3004 AB Rotterdam	Tel. +31 10 4463-700 Fax +31 10 4155-552 Service: 0800-SEWHELP http://www.sew-eurodrive.nl info@sew-eurodrive.nl

22167811/EN – 04/2016

New Zealand			
Assembly Sales Service	Auckland	SEW-EURODRIVE NEW ZEALAND LTD. P.O. Box 58-428 82 Greenmount drive East Tamaki Auckland	Tel. +64 9 2745627 Fax +64 9 2740165 http://www.sew-eurodrive.co.nz sales@sew-eurodrive.co.nz
	Christchurch	SEW-EURODRIVE NEW ZEALAND LTD. 30 Lodestar Avenue, Wigram Christchurch	Tel. +64 3 384-6251 Fax +64 3 384-6455 sales@sew-eurodrive.co.nz
Nigeria			
Sales	Lagos	Greenpeg Nig. Ltd Plot 296A, Adeyemo Akapo Str. Omole GRA Ikeja Lagos-Nigeria	Tel. +234-701-821-9200-1 http://www.greenpegltd.com bolaji.adekunle@greenpegltd.com
Norway			
Assembly Sales Service	Moss	SEW-EURODRIVE A/S Solgaard skog 71 1599 Moss	Tel. +47 69 24 10 20 Fax +47 69 24 10 40 http://www.sew-eurodrive.no sew@sew-eurodrive.no
Pakistan			
Sales	Karachi	Industrial Power Drives Al-Fatah Chamber A/3, 1st Floor Central Commercial Area, Sultan Ahmed Shah Road, Block 7/8, Karachi	Tel. +92 21 452 9369 Fax +92-21-454 7365 seweurodrive@cyber.net.pk
Paraguay			
Sales	Fernando de la Mora	SEW-EURODRIVE PARAGUAY S.R.L De la Victoria 112, Esquina nueva Asunción Departamento Central Fernando de la Mora, Barrio Bernardino	Tel. +595 991 519695 Fax +595 21 3285539 sewpy@sew-eurodrive.com.py
Peru			
Assembly Sales Service	Lima	SEW EURODRIVE DEL PERU S.A.C. Los Calderos, 120-124 Urbanizacion Industrial Vulcano, ATE, Lima	Tel. +51 1 3495280 Fax +51 1 3493002 http://www.sew-eurodrive.com.pe sewperu@sew-eurodrive.com.pe
Philippines			
Sales	Makati	P.T. Cerna Corporation 4137 Ponte St., Brgy. Sta. Cruz Makati City 1205	Tel. +63 2 519 6214 Fax +63 2 890 2802 mech_drive_sys@ptcerna.com http://www.ptcerna.com
Poland			
Assembly Sales Service	Łódź	SEW-EURODRIVE Polska Sp.z.o.o. ul. Techniczna 5 92-518 Łódź	Tel. +48 42 293 00 00 Fax +48 42 293 00 49 http://www.sew-eurodrive.pl sew@sew-eurodrive.pl
	Service	Tel. +48 42 293 0030 Fax +48 42 293 0043	24 Hour Service Tel. +48 602 739 739 (+48 602 SEW SEW) serwis@sew-eurodrive.pl
Portugal			
Assembly Sales Service	Coimbra	SEW-EURODRIVE, LDA. Av. da Fonte Nova, n.º 86 3050-379 Mealhada	Tel. +351 231 20 9670 Fax +351 231 20 3685 http://www.sew-eurodrive.pt infosew@sew-eurodrive.pt
Romania			
Sales Service	Bucharest	Sialco Trading SRL str. Brazilia nr. 36 011783 Bucuresti	Tel. +40 21 230-1328 Fax +40 21 230-7170 sialco@sialco.ro
Russia			
Assembly Sales Service	St. Petersburg	ЗАО «СЕВ-ЕВРОДРАЙФ» а. я. 36 195220 Санкт-Петербург	Tel. +7 812 3332522 / +7 812 5357142 Fax +7 812 3332523 http://www.sew-eurodrive.ru sew@sew-eurodrive.ru

22167811/EN – 04/2016

Sambia			
representation: South Africa			
Senegal			
Sales	Dakar	SENEMECA Mécanique Générale Km 8, Route de Rufisque B.P. 3251, Dakar	Tel. +221 338 494 770 Fax +221 338 494 771 http://www.senemeca.com senemeca@senemeca.sn
Serbia			
Sales	Belgrade	DIPAR d.o.o. Ustanicka 128a PC Košum, IV floor 11000 Beograd	Tel. +381 11 347 3244 / +381 11 288 0393 Fax +381 11 347 1337 office@dipar.rs
Singapore			
Assembly Sales Service	Singapore	SEW-EURODRIVE PTE. LTD. No 9, Tuas Drive 2 Jurong Industrial Estate Singapore 638644	Tel. +65 68621701 Fax +65 68612827 http://www.sew-eurodrive.com.sg sewsingapore@sew-eurodrive.com
Slovakia			
Sales	Bratislava	SEW-Eurodrive SK s.r.o. Rybničná 40 831 06 Bratislava	Tel.+421 2 33595 202, 217, 201 Fax +421 2 33595 200 http://www.sew-eurodrive.sk sew@sew-eurodrive.sk
	Košice	SEW-Eurodrive SK s.r.o. Slovenská ulica 26 040 01 Košice	Tel. +421 55 671 2245 Fax +421 55 671 2254 Mobile +421 907 671 976 sew@sew-eurodrive.sk
Slovenia			
Sales Service	Celje	Pakman - Pogonska Tehnika d.o.o. Ul. XIV. divizije 14 3000 Celje	Tel. +386 3 490 83-20 Fax +386 3 490 83-21 pakman@siol.net
South Africa			
Assembly Sales Service	Johannesburg	SEW-EURODRIVE (PROPRIETARY) LIMITED Eurodrive House Cnr. Adcock Ingram and Aerodrome Roads Aeroton Ext. 2 Johannesburg 2013 P.O.Box 90004 Bertsham 2013	Tel. +27 11 248-7000 Fax +27 11 248-7289 http://www.sew.co.za info@sew.co.za
	Cape Town	SEW-EURODRIVE (PROPRIETARY) LIMITED Rainbow Park Cnr. Racecourse & Omuramba Road Montague Gardens Cape Town P.O.Box 36556 Chempet 7442	Tel. +27 21 552-9820 Fax +27 21 552-9830 Telex 576 062 bgriffiths@sew.co.za
	Durban	SEW-EURODRIVE (PROPRIETARY) LIMITED 48 Prospecton Road Isipingo Durban P.O. Box 10433, Ashwood 3605	Tel. +27 31 902 3815 Fax +27 31 902 3826 cdejager@sew.co.za
	Nelspruit	SEW-EURODRIVE (PROPRIETARY) LIMITED 7 Christie Crescent Vintonia P.O.Box 1942 Nelspruit 1200	Tel. +27 13 752-8007 Fax +27 13 752-8008 robermeyer@sew.co.za
South Korea			
Assembly Sales Service	Ansan	SEW-EURODRIVE KOREA CO., LTD. 7, Dangjaengi-ro, Danwon-gu, Ansan-si, Gyeonggi-do, Zip 425-839	Tel. +82 31 492-8051 Fax +82 31 492-8056 http://www.sew-eurodrive.kr master.korea@sew-eurodrive.com

22167811/EN – 04/2016

South Korea			
	Busan	SEW-EURODRIVE KOREA CO., LTD. 28, Noksansandan 262-ro 50beon-gil, Gangseo-gu, Busan, Zip 618-820	Tel. +82 51 832-0204 Fax +82 51 832-0230
Spain			
Assembly Sales Service	Bilbao	SEW-EURODRIVE ESPAÑA, S.L. Parque Tecnológico, Edificio, 302 48170 Zamudio (Vizcaya)	Tel. +34 94 43184-70 Fax +34 94 43184-71 http://www.sew-eurodrive.es sew.spain@sew-eurodrive.es
Sri Lanka			
Sales	Colombo	SM International (Pte) Ltd 254, Galle Raod Colombo 4, Sri Lanka	Tel. +94 1 2584887 Fax +94 1 2582981
Swaziland			
Sales	Manzini	C G Trading Co. (Pty) Ltd PO Box 2960 Manzini M200	Tel. +268 2 518 6343 Fax +268 2 518 5033 engineering@cgtrading.co.sz
Sweden			
Assembly Sales Service	Jönköping	SEW-EURODRIVE AB Gnejsvägen 6-8 553 03 Jönköping Box 3100 S-550 03 Jönköping	Tel. +46 36 34 42 00 Fax +46 36 34 42 80 http://www.sew-eurodrive.se jonkoping@sew.se
Switzerland			
Assembly Sales Service	Basel	Alfred Imhof A.G. Jurastrasse 10 4142 Münchenstein bei Basel	Tel. +41 61 417 1717 Fax +41 61 417 1700 http://www.imhof-sew.ch info@imhof-sew.ch
Taiwan			
Sales	Taipei	Ting Shou Trading Co., Ltd. 6F-3, No. 267, Sec. 2 Tung Huw S. Road Taipei	Tel. +886 2 27383535 Fax +886 2 27368268 Telex 27 245 sewtwn@ms63.hinet.net http://www.tingshou.com.tw
	Nan Tou	Ting Shou Trading Co., Ltd. No. 55 Kung Yeh N. Road Industrial District Nan Tou 540	Tel. +886 49 255353 Fax +886 49 257878 sewtwn@ms63.hinet.net http://www.tingshou.com.tw
Tanzania			
Sales	Daressalam	SEW-EURODRIVE PTY LIMITED TANZANIA Plot 52, Regent Estate PO Box 106274 Dar Es Salaam	Tel. +255 0 22 277 5780 Fax +255 0 22 277 5788 http://www.sew-eurodrive.co.tz info@sew.co.tz
Thailand			
Assembly Sales Service	Chonburi	SEW-EURODRIVE (Thailand) Ltd. 700/456, Moo.7, Donhuaroh Muang Chonburi 20000	Tel. +66 38 454281 Fax +66 38 454288 sewthailand@sew-eurodrive.com
Tunisia			
Sales	Tunis	T. M.S. Technic Marketing Service Zone Industrielle Mghira 2 Lot No. 39 2082 Fouchana	Tel. +216 79 40 88 77 Fax +216 79 40 88 66 http://www.tms.com.tn tms@tms.com.tn
Turkey			
Assembly Sales Service	Kocaeli-Gebze	SEW-EURODRİVE Hareket Sistemleri San. Ve TIC. Ltd. Sti Gebze Organize Sanayi Böl. 400 Sok No. 401 41480 Gebze Kocaeli	Tel. +90 262 9991000 04 Fax +90 262 9991009 http://www.sew-eurodrive.com.tr sew@sew-eurodrive.com.tr

22167811/EN – 04/2016

Ukraine			
Assembly Sales Service	Dnipropetrovsk	ООО «СЕВ-Евродрайв» ул. Рабочая, 23-В, офис 409 49008 Днепропетровск	Tel. +380 56 370 3211 Fax +380 56 372 2078 http://www.sew-eurodrive.ua sew@sew-eurodrive.ua
Uruguay			
Assembly Sales	Montevideo	SEW-EURODRIVE Uruguay, S. A. Jose Serrato 3569 Esqina Corumbe CP 12000 Montevideo	Tel. +598 2 21181-89 Fax +598 2 21181-90 sewuy@sew-eurodrive.com.uy
USA			
Production Assembly Sales Service	Southeast Region	SEW-EURODRIVE INC. 1295 Old Spartanburg Highway P.O. Box 518 Lyman, S.C. 29365	Tel. +1 864 439-7537 Fax Sales +1 864 439-7830 Fax Production +1 864 439-9948 Fax Assembly +1 864 439-0566 Fax Confidential/HR +1 864 949-5557 http://www.seweurodrive.com cslyman@seweurodrive.com
Assembly Sales Service	Northeast Region	SEW-EURODRIVE INC. Pureland Ind. Complex 2107 High Hill Road, P.O. Box 481 Bridgeport, New Jersey 08014	Tel. +1 856 467-2277 Fax +1 856 845-3179 csbridgeport@seweurodrive.com
	Midwest Region	SEW-EURODRIVE INC. 2001 West Main Street Troy, Ohio 45373	Tel. +1 937 335-0036 Fax +1 937 332-0038 cstroy@seweurodrive.com
	Southwest Region	SEW-EURODRIVE INC. 3950 Platinum Way Dallas, Texas 75237	Tel. +1 214 330-4824 Fax +1 214 330-4724 csdallas@seweurodrive.com
	Western Region	SEW-EURODRIVE INC. 30599 San Antonio St. Hayward, CA 94544	Tel. +1 510 487-3560 Fax +1 510 487-6433 cshayward@seweurodrive.com
	Wellford	SEW-EURODRIVE INC. 148/150 Finch Rd. Wellford, S.C. 29385	IGLogistics@seweurodrive.com
	Additional addresses for service provided on request!		
Uzbekistan			
Technical Office	Tashkent	SEW-EURODRIVE LLP Representative office in Uzbekistan 96A, Sharaf Rashidov street, Tashkent, 100084	Tel. +998 71 2359411 Fax +998 71 2359412 http://www.sew-eurodrive.uz sew@sew-eurodrive.uz
Vietnam			
Sales	Ho Chi Minh City	Nam Trung Co., Ltd Huế - South Vietnam / Construction Materials 250 Binh Duong Avenue, Thu Dau Mot Town, Binh Duong Province HCM office: 91 Tran Minh Quyen Street District 10, Ho Chi Minh City	Tel. +84 8 8301026 Fax +84 8 8392223 khanh-nguyen@namtrung.com.vn http://www.namtrung.com.vn
	Hanoi	MICO LTD Quảng Trị - North Vietnam / All sectors except Construction Materials 8th Floor, Ocean Park Building, 01 Dao Duy Anh St, Ha Noi, Viet Nam	Tel. +84 4 39386666 Fax +84 4 3938 6888 nam_ph@micogroup.com.vn http://www.micogroup.com.vn

22167811/EN – 04/2016

Index

Numerical

A

B

C

22167811/EN – 04/16

D

E

22167811/EN – 04/16

F

G

H

I

L

M

22167811/EN – 04/16

N

O

22167811/EN – 04/16

P

22167811/EN – 04/16

R

S

22167811/EN – 04/16

T

U

22167811/EN – 04/16

V

W

22167811/EN – 04/16

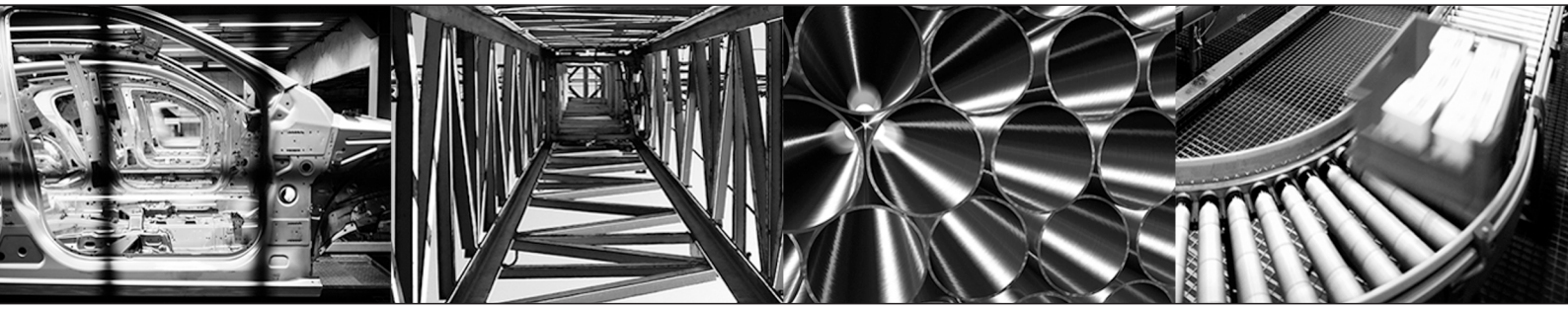

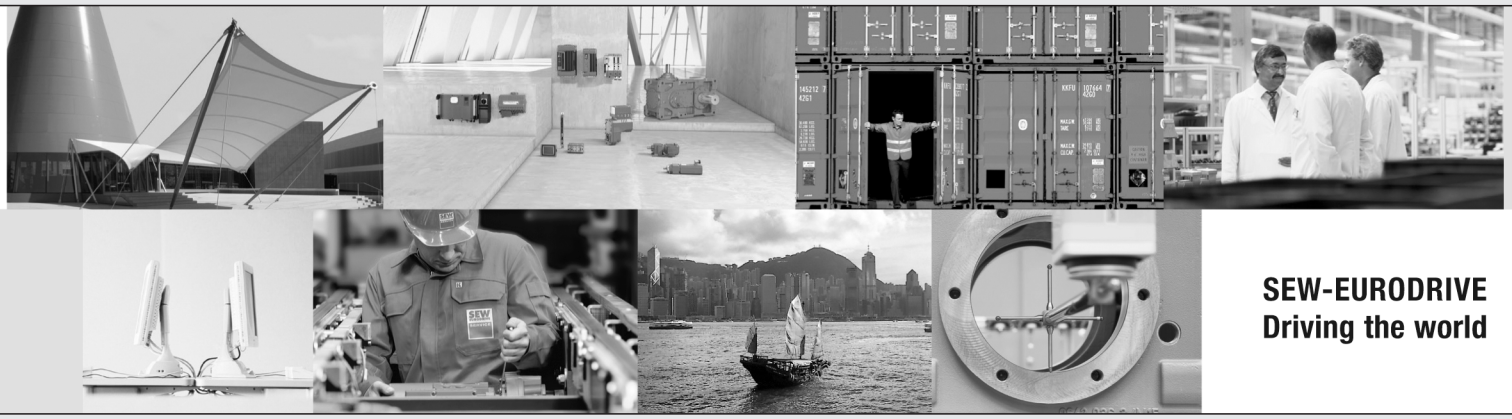

SEW-EURODRIVE
Driving the world

SEW-EURODRIVE GmbH & Co KG
P.O. Box 3023
76642 BRUCHSAL
GERMANY
Phone +49 7251 75-0
Fax +49 7251 75-1970
sew@sew-eurodrive.com
➞ **www.sew-eurodrive.com**